Newland

NLS-HR15

(NLS-HR1550-3E)

Hand-held Barcode Scanner

User Guide

Disclaimer

© 2013-2018 Fujian Newland Auto-ID Tech. Co., Ltd. All rights reserved.

Please read through the manual carefully before using the product and operate it according to the manual. It is advised that you should keep this manual for future reference.

Do not disassemble the device or remove the seal label from the device, doing so will void the product warranty provided by Fujian Newland Auto-ID Tech. Co., Ltd.

All pictures in this manual are for reference only and actual product may differ. Regarding to the product modification and update, Fujian Newland Auto-ID Tech. Co., Ltd. reserves the right to make changes to any software or hardware to improve reliability, function, or design at any time without notice. The information contained herein is subject to change without prior notice.

The products depicted in this manual may include software copyrighted by Fujian Newland Auto-ID Tech. Co., Ltd or third party. The user, corporation or individual, shall not duplicate, in whole or in part, distribute, modify, decompile, disassemble, decode, reverse engineer, rent, transfer or sublicense such software without prior written consent from the copyright holders.

This manual is copyrighted. No part of this publication may be reproduced, distributed or used in any form without written permission from Newland.

Fujian Newland Auto-ID Tech. Co., Ltd. reserves the right to make final interpretation of the statement above.

Fujian Newland Auto-ID Tech. Co., Ltd.
3F, Building A, No.1, Rujiang Xi Rd., Mawei, Fuzhou, Fujian, China 350015
http://www.nlscan.com

Revision History

Version	Description	Date
V1.0	Initial release.	December 25, 2011
V1.1	Corrected improper descriptions and moved the Enter/Exit Setup barcodes to page header and footer.	August 10, 2012
V1.2	1. Added the **Pairing Settings** section in Chapter 2; added the **Timeout between Decodes (Same Barcode)** feature for the Sense and Continuous modes. 2. Added the **Improve Reliability of Communication between Cradle and PC** section in Chapter 4. 3. Added PDF417 and MicroPDF417 sample barcodes in Chapter 6.	March 19, 2013
V1.3	1. Added the **German keyboard**, **Emulate Alt+Keypad**, **Function Key Mapping** and **Emulate Numeric Keypad** features in Chapter 4. 2. Added the **ASCII Table and ASCII Function Key Mapping Table** in Appendix.	October 28, 2013
V1.4	Added the **Convert Code 39 to Code 32 (Italian Pharma Code)** and **Code 32 Prefix** features in Chapter 6.	November 28, 2014
V1.5	1. Added the **Timeout between Decodes (Same Barcode)** feature for the Manual mode in Chapter 2. 2. Added the **Examine KBW Connection** feature in Chapter 4. Note: You must have firmware version V3.5.0 or later to use the new features above.	June 25, 2015
V1.6	Added 4 USB country keyboard types: **Belgium**, **Russia**, **Sweden**, **Portugal**; and the **Host Acknowledgment** feature in Chapter 4. Note: You must have firmware version V3.5.12 or later to use the new features above.	June 8, 2016
V1.7	1. Added the **Keep/Delete Stored Data after Batch Transmission**, **Batch Mode Same Barcode Reading** and **Batch Mode Transmit Delay** features and two more baud rate options (1200 and 2400) in Chapter 4. 2. Added the **Transmit Code 32 Check Digit** and **Transmit Code 32 Start/Stop Character** features in Chapter 6. 3. Added a new chapter – Chapter 7 Data Formatter. Note: You must have firmware version V3.5.19 or later to use the new features above.	September 2, 2016
V1.8	Added the **EAN-13 Beginning with 290 Add-On Code Required**, **EAN-13 Beginning with 378/379 Add-On Code Required**, **EAN-13 Beginning with 414/419 Add-On Code Required**, **EAN-13 Beginning with 434/439 Add-On Code Required**, **EAN-13 Beginning with 977 Add-On Code Required**, **EAN-13 Beginning with 978 Add-On Code Required**, **EAN-13 Beginning with 979 Add-On Code Required** features in Chapter 6. Note: You must have firmware version V3.5.21 or later to use the new features above.	December 7, 2016
V1.9	Added the **Febraban** feature in Chapter 6. Note: You must have firmware version V3.5.22 or later to use the new feature above.	December 13, 2017
V2.0	Added the **USB Enumeration** feature in Chapter 4. Note: You must have firmware version V3.5.24 or later to use the new feature above.	April 19, 2018

Table of Contents

Revision History ..... **- 3 -**

Preface **1**

Introduction 1
Chapter Description 1
Document Set 2

Chapter 1 Getting Started **3**

Introduction 3
Unpacking 4
Scanner 4
CD15 Cradle 5
Communication Mode 6
CD15 Data Port 7
USB/RS-232 Port 8
Connecting Cradle to a Host 9
Use USB Cable 9
Use RS-232 Cable 10
Power On, Sleep, Power Off, Reboot 11
Maintenance 11
Depth of Field 12
Specifications 13
Dimensions of Scanner 14
Side View 14
Front View 14
Top View 15
Dimensions of CD15 Cradle 15
Scanning Instructions 16

Chapter 2 General Settings **18**

Introduction 18
Barcode Programming 18
Command Programming 18

Programming Barcode/ Programming Command/Function 19
Use of Programming Barcodes 19
Use of Command 20
Programming Mode 20
Command Format 20
Configuration Process Flow 22
Default Settings 23
Restore Factory Default Settings 23
Pairing Settings 24
Pair Scanner with Cradle 24
Pair Cradle with Zigbee Router 24
Clear Pairing Settings 24
Operating Mode Options 25
Power-Off Timeout 26
Scan Mode 27
Manual Mode 27
Auto Mode 29
Blink Mode 31
Sense Mode 32
Continuous Mode 35
Delayed Sense Mode 37
Security Setup 38
Good Read Beep 39
Decode Area and Output Interval 41
Other Settings 42
Temporary Mute 42
Chapter 3 Inquiry Command 43
Introduction 43
Obtain Scanner Information 43
Obtain Cradle Information 44
Obtain Wireless Module Information 45
Chapter 4 Communication Settings 46
Introduction 46
Wireless Communication Setup 46
Host Acknowledgment 47

Advanced Settings for the Batch Mode 48
Keep/Delete Stored Data after Batch Transmission 48
Batch Mode Same Barcode Reading 48
Batch Mode Transmit Delay 49
RS-232 Interface on CD15 Cradle 50
Baud Rate 50
Parity Check 51
Stop Bit 51
Flow Control 52
Data Bit 53
USB Interface on CD15 Cradle 54
USB HID-KBW 54
USB COM Port Emulation 54
Keyboard Parameters 55
Examine KBW Connection 55
USB Enumeration 55
Keyboard Layout 56
Inter-Character Delay 58
Convert Case 58
Emulate ALT+Keypad 59
Function Key Mapping 60
Emulate Numeric Keypad 61
Reliability of Communication between Cradle and PC 62
Chapter 5 Prefix & Suffix 63
Introduction 63
Prefix Sequence 63
Custom Prefix 64
Enable/Disable Custom Prefix 64
Set Custom Prefix 64
AIM ID Prefix 65
Code ID Prefix 65
Custom Suffix 66
Enable/Disable Custom Suffix 66
Set Custom Suffix 66
Terminating Character Suffix 67

Enable/Disable Terminating Character Suffix 67
Set Terminating Character Suffix 68

Chapter 6 Symbologies 69

Introduction 69
Code 128 70
Restore Default Settings 70
Enable/Disable Code 128 70
Set Code ID 71
Set Length Range for Code 128 72
UCC/EAN-128 73
Restore Default Settings 73
Enable/Disable UCC/EAN-128 73
Set Code ID 74
Set Length Range for UCC/EAN-128 75
AIM 128 76
Restore Default Settings 76
Enable/Disable AIM 128 76
Set Code ID 77
Set Length Range for AIM 128 78
EAN-8 79
Restore Default Settings 79
Enable/Disable EAN-8 79
Set Code ID 80
2-Digit Add-On Code 81
5-Digit Add-On Code 82
EAN-8 Extension 83
Transmit Check Digit 83
EAN-13 84
Restore Default Settings 84
Enable/Disable EAN-13 84
Transmit Check Digit 85
Set Code ID 85
2-Digit Add-On Code 86
5-Digit Add-On Code 87
EAN-13 Beginning with 290 Add-On Code Required 88

EAN-13 Beginning with 378/379 Add-On Code Required 88
EAN-13 Beginning with 414/419 Add-On Code Required 89
EAN-13 Beginning with 434/439 Add-On Code Required 89
EAN-13 Beginning with 977 Add-On Code Required 90
EAN-13 Beginning with 978 Add-On Code Required 90
EAN-13 Beginning with 979 Add-On Code Required 91
ISSN 92
Restore Default Settings 92
Enable/Disable ISSN 92
Set Code ID 93
ISBN 94
Restore Default Settings 94
Enable/Disable ISBN 94
Set ISBN Format 95
Set Code ID 95
UPC-E 96
Restore Default Settings 96
Enable/Disable UPC-E 96
Transmit Check Digit 97
Set Code ID 97
2-Digit Add-On Code 98
5-Digit Add-On Code 99
Transmit System Character “0” 100
UPC-E Extension 100
UPC-A 101
Restore Default Settings 101
Enable/Disable UPC-A 101
Set Code ID 102
Transmit Check Digit 103
Transmit Preamble Character 103
2-Digit Add-On Code 104
5-Digit Add-On Code 105
Interleaved 2 of 5 106
Restore Default Settings 106
Enable/Disable Interleaved 2 of 5 106
Set Code ID 107

Check Digit Verification 108
Set Length Range for Interleaved 2 of 5 109
Disable/Enable Febraban 110
ITF-6 111
Set Code ID 112
ITF-14 113
Set Code ID 114
Deutsche 14 115
Restore Default Settings 115
Enable/Disable Deutsche14 115
Set Code ID 116
Deutsche 12 117
Restore Default Settings 117
Enable/Disable Deutsche 12 117
Set Code ID 118
COOP 25 (Japanese Matrix 2 of 5) 119
Restore Default Settings 119
Enable/Disable COOP 25 119
Set Code ID 120
Check Digit Verification 121
Set Length Range for COOP 25 122
Matrix 2 of 5 (European Matrix 2 of 5) 123
Restore Default Settings 123
Enable/Disable Matrix 2 of 5 123
Set Code ID 124
Check Digit Verification 125
Set Length Range for Matrix 2 of 5 126
Industrial 25 127
Restore Default Settings 127
Enable/Disable Industrial 25 127
Set Code ID 128
Check Digit Verification 129
Set Length Range for Industrial 25 130
Standard 25 131
Restore Default Settings 131
Enable/Disable Standard 25 131

Set Code ID....132
Check Digit Verification....133
Set Length Range for Standard 25....134
Code 39....135
Restore Default Settings....135
Enable/Disable Code 39....135
Set Code ID....136
Check Digit Verification....137
Transmit Start/Stop Character....138
Enable/Disable Code 39 Full ASCII....138
Set Length Range for Code 39....139
Enable Code 32....140
Code 32 Prefix....140
Transmit Code 32 Check Digit....141
Transmit Code 32 Start/Stop Character....141
Codabar....142
Restore Default Settings....142
Enable/Disable Codabar....142
Set Code ID....143
Check Digit Verification....144
Start/Stop Character....145
Set Length Range for Codabar....146
Code 93....147
Restore Default Settings....147
Enable/Disable Code 93....147
Set Code ID....148
Check Digit Verification....149
Set Length Range for Code 93....150
Code 11....151
Restore Default Settings....151
Enable/Disable Code 11....151
Set Code ID....152
Check Digit Verification....153
Set Length Range for Code 11....154
Plessey....155
Restore Default Settings....155

Enable/Disable Plessey....155
Set Code ID....156
Check Digit Verification....157
Set Length Range for Plessey....158
MSI-Plessey....159
Restore Default Settings....159
Enable/Disable MSI-Plessey....159
Set Code ID....160
Check Digit Verification....161
Set Length Range for MSI-Plessey....162
GS1 Databar....163
Restore Default Settings....163
Enable/Disable GS1 Databar....163
Set Code ID....164
PDF417....165
Restore Default Settings....165
Enable/Disable PDF417....165
Set Code ID....166
Set Length Range for PDF417....167
Sample Barcodes....168
MicroPDF417....169
Restore Default Settings....169
Enable/Disable MicroPDF417....169
Set Code ID....170
Set Length Range for MicroPDF417....171
Sample Barcodes....172
Chapter 7 Data Formatter....174
Introduction....174
Add a Data Format....174
Programming with Barcodes....174
Programming with Serial Commands....176
Enable Data Format....177
Change Data Format for a Single Scan....177
Enable/Disable Data Formatter....178
Non-Match Error Beep....179

Clear Data Format 180
Query Data Formats 180
Formatter Command Type 6 181
Send Commands 181
Move Commands 184
Search Commands 186
Miscellaneous Commands 189
Appendix 191
Factory Defaults Table 191
AIM ID Table 199
Code ID Table 200
ASCII Table 201
ASCII Function Key Mapping Table 205
Digit Barcodes 207
Save/Cancel Barcodes 209
Symbology ID Number 210

Preface

Introduction

This manual provides detailed instructions for setting up and using the NLS-HR1550-3E hand-held barcode scanner (hereinafter referred to as **"HR15 cordless scanner"** or **"the scanner"**).

Chapter Description

- ✧ *Chapter 1, Getting Started* : This chapter gives a general description of HR15 cordless scanner including its technical parameters.
- ✧ *Chapter 2, General Settings* : This chapter introduces two methods to configure the HR15 cordless scanner: barcode programming and command programming.
- ✧ *Chapter 3, Inquiry Command* : This chapter describes how to obtain the information of HR15 cordless scanner by scanning programming barcodes.
- ✧ *Chapter 4, Communication Settings* : This chapter describes how to configure communication mode, serial port parameters and USB function.
- ✧ *Chapter 5, Prefix & Suffix* : This chapter describes how to use prefix and suffix to customize scanned data.
- ✧ *Chapter 6, Symbologies* : This chapter lists all compatible symbologies and describes how to configure the relevant parameters.
- ✧ *Chapter 7, Data Formatter* : This chapter explains how to customize scanned data with the data formatter.
- ✧ *Appendix* : This chapter offers factory defaults table and a bunch of frequently used programming barcodes.

Document Set

The documentation set for the NLS-HR15 cordless scanner provides information for specific user needs and includes:

NLS-HR1550-3E Quick Start Guide	Describes how to get the HR15 cordless scanner up and running, and introduces some basic operations.
NLS-HR1550-3E User Guide	Describes how to use and set the HR15 cordless scanner.

Chapter 1 Getting Started

Introduction

HR15 cordless scanner is a 1D barcode scanner with excellent performance. Besides all common 1D symbologies, it can also read 2D stacked symbologies such as PDF417 and MicroPDF417. Based on the UIMG® technology independently developed by Newland, HR15 cordless scanner is able to deliver rapid image acquisition and accurate decoding; it can provide customers with best services. HR15 cordless scanner boasts the ergonomical design that ensures easy and comfortable operation.

An illustrated introduction to the HR15 cordless scanner is included in this chapter. If you have an HR15 device at hand, make good use of it to develop a better understanding of this manual. This chapter is written for normal users, maintenance staff and software developers.

Unpacking

Open the package and take out HR15 cordless scanner and its accessories. Check to make sure everything on the packing list is present and intact. If any contents are damaged or missing, please keep the original package and contact your dealer immediately for after-sale service.

Note: CD15, the cradle for HR15 cordless scanner is individually wrapped.

Scanner

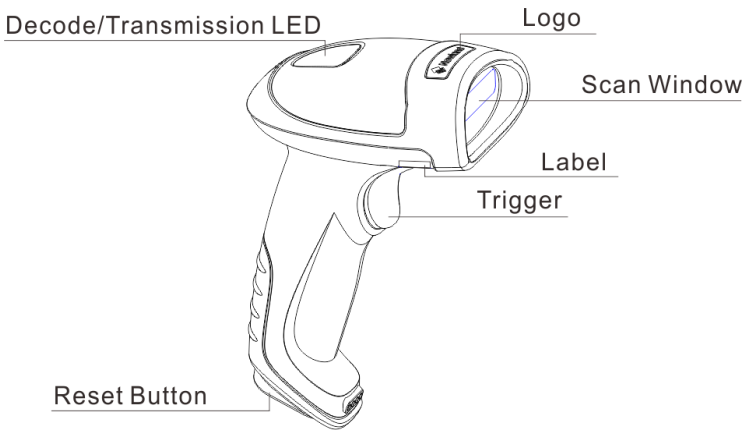

Fig. 1-1

Decode/Transmission LED:

Green: Barcode decoded successfully.
Battery is fully charged.

Blue: Zigbee is available.

Red: Data transmission failed.
Device is charging.

Purple: Firmware update is in progress.
There is data in FLASH memory.

CD15 Cradle

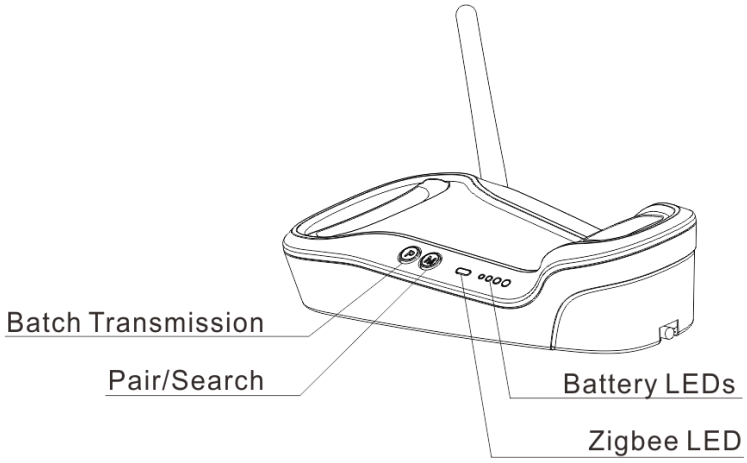

Buttons:

P: Batch Transmission

M: Pair/Search

LEDs:

Zigbee LED (blue):

Zigbee is available.

Battery LEDs (green):

Indicate battery level (four levels)

Fig. 1-2

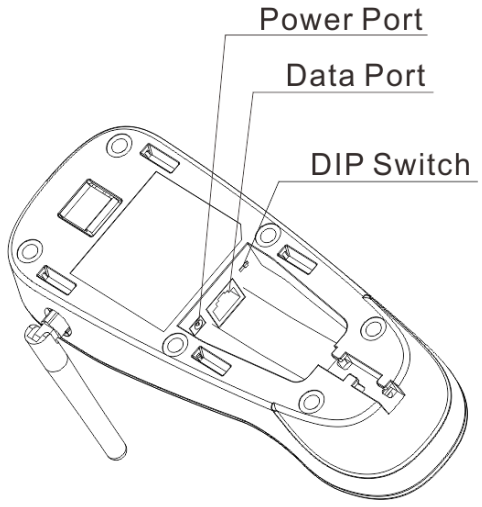

Fig. 1-3

Communication Mode

There are three communication modes: synchronous mode (default), asynchronous mode and batch mode.

- ✧ **Synchronous Mode:** If Zigbee is available, scanned data will be transferred to the cradle immediately after a good read; if Zigbee is unavailable, the transmission of decoded data cannot be accomplished.
- ✧ **Asynchronous Mode:** If Zigbee is available, scanned data will be transferred to the cradle immediately after a good read; if Zigbee is unavailable, the decoded data will be first stored in the flash memory in a FIFO (first in first out) manner, and be sent automatically to the cradle when Zigbee becomes available.
- ✧ **Batch Mode:** The decoded data will be stored in the flash memory no matter whether Zigbee is available or not. To send the stored data to the cradle, you need to insert the scanner in the cradle and then press “P” button on the cradle.

CD15 Data Port

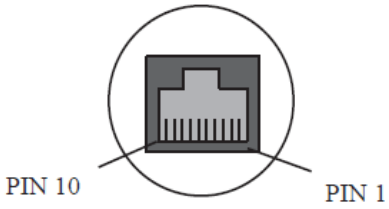

Fig. 1-4

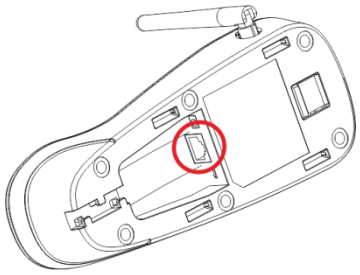

Fig. 1-5

Pinout of CD15 data port

PIN	Signal	Type	Function
1	NC	-	No connection
2	NC	-	No connection
3	VCC	P	Power+ (+5V)
4	TXD	O	RS-232 output
5	RXD	I	RS-232 input
6	CTS	I	Flow control signal
7	RTS	O	
8	GND	P	Ground
9	D-	I/O	USB signal
10	D+	I/O	

USB/RS-232 Port

CD15 cradle must be connected to a Host in actual application, such as PC, POS or any intelligent terminal with USB or RS-232 port, via a communication cable, either USB or RS-232 cable.

- USB

USB port on the Host 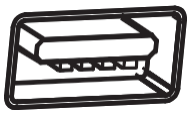

- RS-232

RS-232 port on the Host

Note: Please check the port on the Host and purchase the right cable.

Connecting Cradle to a Host

Use USB Cable

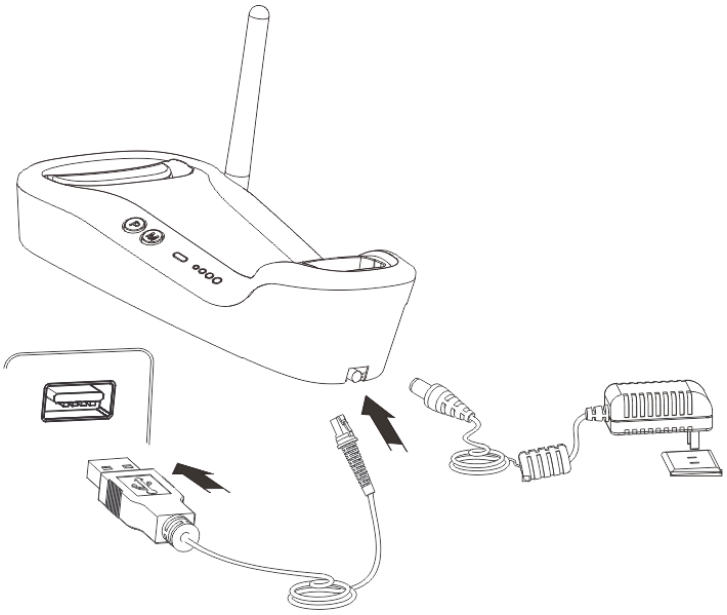

Fig. 1-6

Connect the CD15 cradle to a Host through a USB cable with RJ45 and USB connectors:

1. Plug the RJ45 connector into the data port (see Fig.1-3) on CD15 cradle.
2. Plug the USB connector into the USB port on the Host.
3. Plug the supplied power adapter into the power port (see Fig.1-3) on the cradle.

Use RS-232 Cable

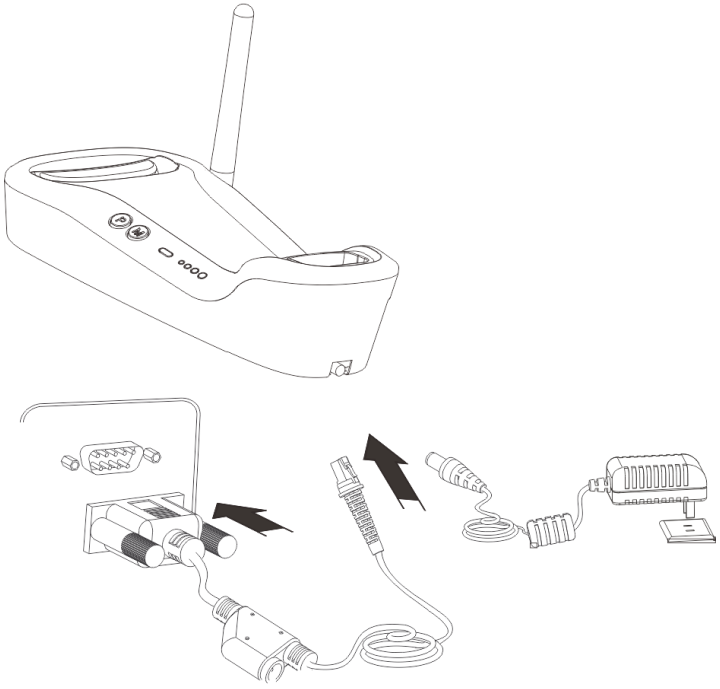

Fig. 1-7

Connect the CD15 cradle to a Host through an RS-232 cable with RJ45 and RS-232 connectors:

1. Plug the RJ45 connector into the data port (see Fig.1-3) on the cradle.
2. Plug the RS-232 connector into the RS-232 port on the Host.
3. Plug the supplied power adapter into the power port (see Fig.1-3) on the cradle.

Power On, Sleep, Power Off, Reboot

Powering on the scanner

Hold down the trigger on the scanner for 1 second or longer.

Note: When using the scanner for the first time, the user MUST hold down the trigger for 10-15 seconds to exit battery protection mode and activate the scanner. The scanner emits several beeps to indicate success.

Entering the sleep mode

If no operation is performed on the scanner for 5 seconds, it will automatically enter the sleep mode. (Applicable to the Manual mode only)

Powering off the scanner

Scan the **Power Off** barcode. (See the **"Operating Mode Options"** section in Chapter 2)

Note: The scanner that has remained in sleep mode for a specific time period (default: 5 minutes, programmable) will be automatically turned off. (To change the time period, see the "**Power-Off Timeout"** section in Chapter 2).

Rebooting the scanner

If the scanner stops responding to input or runs abnormally, press the Reset button on the scanner to reboot it.

Maintenance

- ✧ The scan window should be kept clean.
- ✧ Do not scratch the scan window of the device.
- ✧ Use soft brush to remove the stain from the scan window.
- ✧ Use the soft cloth to clean the window, such as eyeglass cleaning cloth.
- ✧ Do not spray any liquid on the scan window.
- ✧ Clean other parts of the device with water only.

Note: The warranty **DOES NOT** cover damages caused by inappropriate care and maintenance.

Depth of Field

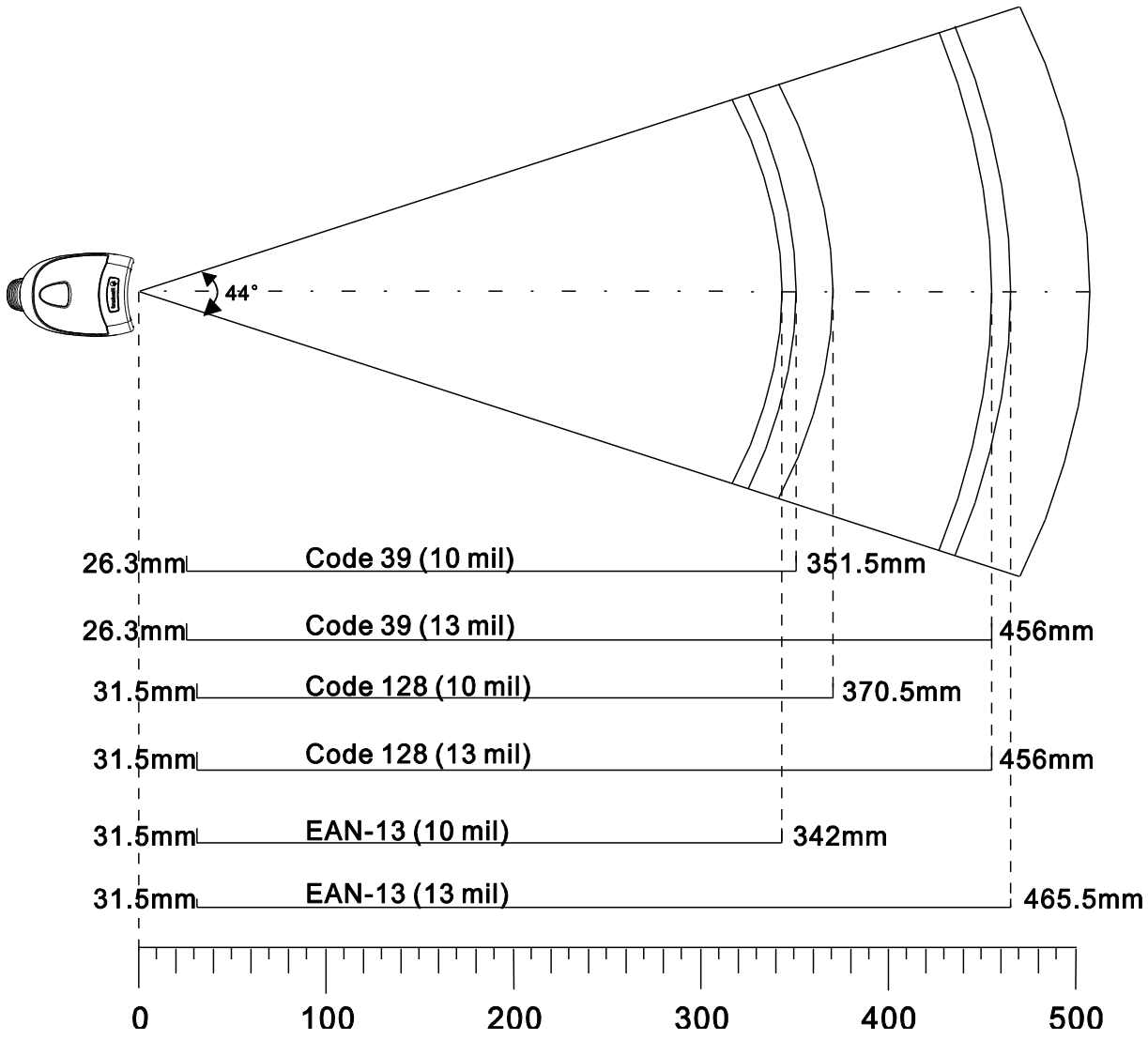

Fig. 1-8

Specifications

Performance		
Light Source		620nm visible red LED
Image Sensor		Linear imager
Symbologies		Code128, EAN-13, EAN-8, Code 39,UPC-A, UPC-E, Codabar, Interleaved 2 of 5, ISBN, Code 93, UCC/EAN-128, GS1 Databar, PDF417 (max. 255 bytes), Micro PDF417 (max. 255 bytes), etc.
Resolution		⩾ 4mil
Scan Angle**	Pitch	±55° @ 0° Roll and 0° Skew
	Roll	±30° @ 0° Pitch and 0° Skew
	Skew	±75° @ 0° Roll and 0° Pitch
Minimum Symbol Contrast		25%
Scan Rate		300 scans per second
Interface		RS-232, USB
Physical		
Dimensions of Scanner(L x W x H)		113.5 x 73 x 159 mm
Dimensions of Cradle(L x W x H)		195 x 82.5 x 47 mm
Weight of Scanner		210 g (including battery)
Weight of Cradle		150 g
Indication		Beep and LED
Power Adaptor		Output: DC5V, 1.5A; Input: AC100~240V, 50~60Hz
Environmental		
Operating Temperature		-10°C to 50°C (14°F to 122°F)
Storage Temperature		-20°C to 60°C (-4°F to 140°F)
Humidity		5% to 95% (non-condensing)
ESD		±8 kV contact discharge; ±12 kV air discharge
IP Seal		IP54
Wireless Connectivity		
Communication Mode		Synchronous, Asynchronous and Batch modes
Wireless Technology		2.4 ~ 2.4835 GHz ISM band, Zigbee technology
Communication Distance		≥50 m
Data Rate		20~250 KBps
Battery		2200mAh Li-ion Battery
Working Time		>17 hours
Charging Time		Around 3.5 hours for full charge
Number of Scans		60,000 scans per charge
Certifications		
FCC Part15 Class B, CE EMC Class B		

****Test conditions:**
Code 39, 3 Bytes; Resolution=10mil; W:N=2.5:1; PCS=0.8; Barcode Height=40mm; Scan Distance=210mm, T=23℃, Illumination= 200 LUX

Dimensions of Scanner

Side View

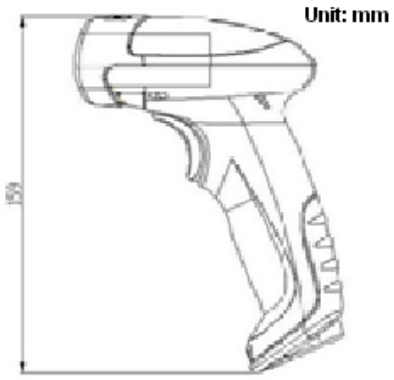

Fig. 1-9

Front View

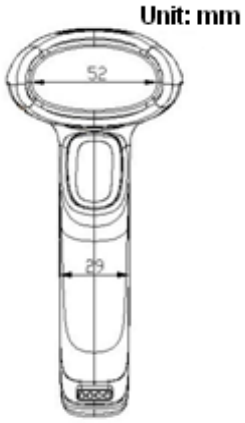

Fig. 1-10

Top View

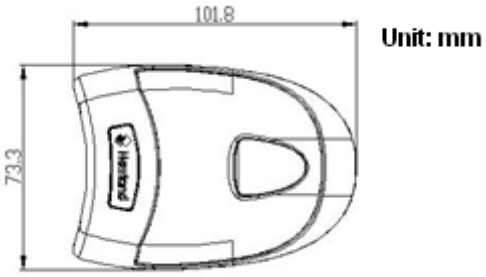

Fig. 1-11

Dimensions of CD15 Cradle

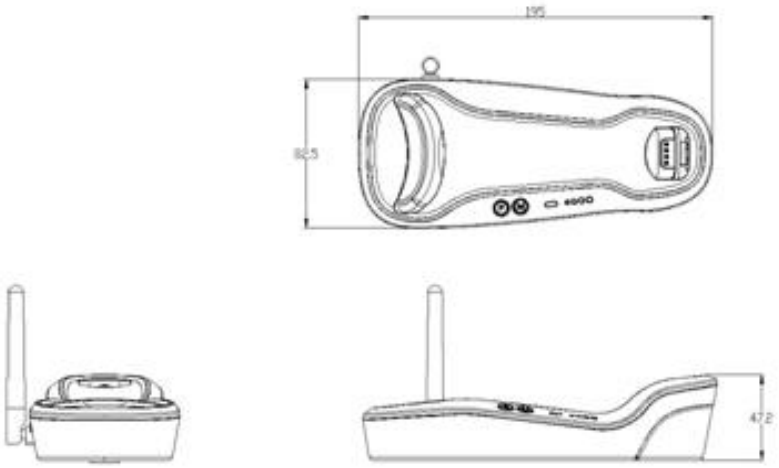

Fig. 1-12

Scanning Instructions

When the HR15 cordless scanner is in the Manual mode (default), you can follow the steps below to scan a barcode:

1. Hold down the trigger. Then the scanner will project a red aiming beam.
2. Aim the red beam across the center of barcode, as shown in Fig.1-13.
3. Release the trigger when the red beam goes off. For a successful read, the scanner will beep and send the decoded data to the Host.

Note: For barcodes of the same batch, the scanner keeps a very high success ratio in certain distance which is regarded as the optimal scanning distance.

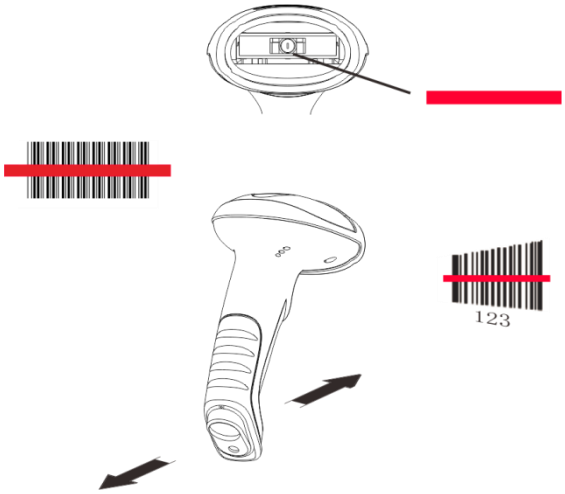

Fig. 1-13

Scan Angle

The scanner is designed to function within a certain range of scan angles. Any unreasonable deviation may cause decoding failure.

Scan angles of the scanner:

- ✧ Pitch ： ±55°, 0° Roll and 0° Skew (Fig. 1-14)
- ✧ Roll ： ±30°, 0° Pitch and 0° Skew (Fig. 1-15)
- ✧ Skew：±75°, 0° Roll and 0° Pitch (Fig. 1-16)

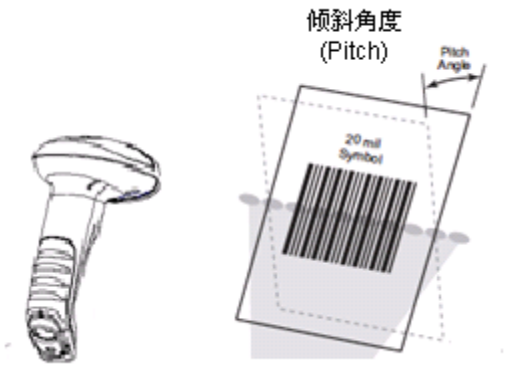

Fig. 1-14

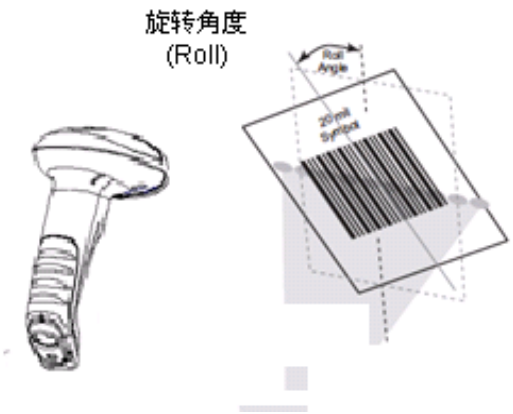

Fig. 1-15

Fig. 1-16

**【Enter Setup】

Chapter 2 General Settings

Introduction

There are two ways to configure the HR15 cordless scanner: barcode programming and command programming.

Barcode Programming

The HR15 cordless scanner scans a series of barcodes to program features. In the following sections, we will explain the available options and features and provide the barcodes to program them.

This programming method is most straightforward. However, it requires manually scanning barcodes. As a result, errors are more likely to occur.

Command Programming

You can send the command strings through the Host to your scanner to perform configuration. In the following sections, the commands will be provided along with programming barcodes.

Users can also design an application to send those command strings to their scanners.

Note: All settings except temporary ones are stored in non-volatile memory of the scanner and will not be lost by removing power from the scanner, or turning off/ rebooting the device.

【Exit Setup】

99900031

**【Enter Setup】

Programming Barcode/ Programming Command/Function

The figure above is an example that shows you the programming barcode and command for the Enter Setup function:

1. The **Enter Setup** barcode.
2. The **Enter Setup** command.
3. The function that can be enabled by using the programming barcode or command listed above.
4. ** indicates factory default setting.

Use of Programming Barcodes

Scanning the **Enter Setup** barcode can enable the scanner to enter the setup mode. Then you can scan a number of programming barcodes to configure your scanner.

The HR15 cordless scanner is in the setup mode by default. In real application, programming barcodes hardly overlap with non-programming barcodes, so it is unnecessary to exit the setup mode each time you finish the configuration.

Some functions or options may involve parameter value settings that require scanning numeric barcodes. To find the numeric barcodes, see the "**Digit Barcodes**" section in Chapter 7.

**【Enter Setup】

Use of Command

Based on serial port communication, programming commands can be composed of printable ASCII characters, 0x20 (space) through 0x7D (“}”).

Programming Mode

Before configuring the HR15 cordless scanner through serial communication, the device must enter the programming mode; in such mode, the device will only accept and process commands and respond accordingly.

You can enable the device to enter or exit the programming mode by sending the specified commands to it. In the event that the device receives no data for 5 seconds, it will exit the programming mode automatically.

Command Format

1. Enter the programming mode: send “**$$$$**” from the Host to the scanner, the scanner returns a reply of “@@@@” to indicate success.
2. Exit the programming mode: send “**%%%%**” from the Host to the scanner, the scanner returns a reply of “^^^^” to indicate success.
3. Receiving “**^^^^**” from the scanner when the Host did not send “**%%%%**” to it indicates the scanner has automatically exit the setup mode.
4. A command string consists of “**#**”, programming command and “**;**”, such as “**#99900030;**”.
5. If a command string is properly processed, the scanner will return a reply consisting of “**!**”, programming command and “**;**”, such as “**!99900030;**”.
6. If the scanner receives an invalid command string or fails to process a command string, it will return a reply consisting of “**?**”, programming command and “**;**”, such as “**?99900030;**”
7. If a query command is properly processed, the scanner will return a reply containing “**!**”, programming command and “**;**”, as well as "**&{**", query result and "**}**". For example:

   send a query command of “**#99900301;**” to get the firmware version information,

   the Host will receive a reply of “**!99900301;&{Firmware v1.7.5;Decoder v1.00.023.C6;|FD25430B}**”.

   Description:

   In the reply, “**Firmware v1.7.5;Decoder v1.00.023.C6**” is the query result; “**|**” is a separator; and “**FD25430B**” is the CRC32 checksum value in hexadecimal format.

【Exit Setup】

**【Enter Setup】

8. If a command involves parameter(s), they shall be combined as per the rule.
   For example: The combined commands for appending terminating character suffix 0x0D (CR),0x0A (LF) to the scanned data and saving the settings:
   "**#99904112;#99900000;#99900015;#99900000;#99900012;#99900020;**".

【Exit Setup】

99900031

**【Enter Setup】

Configuration Process Flow

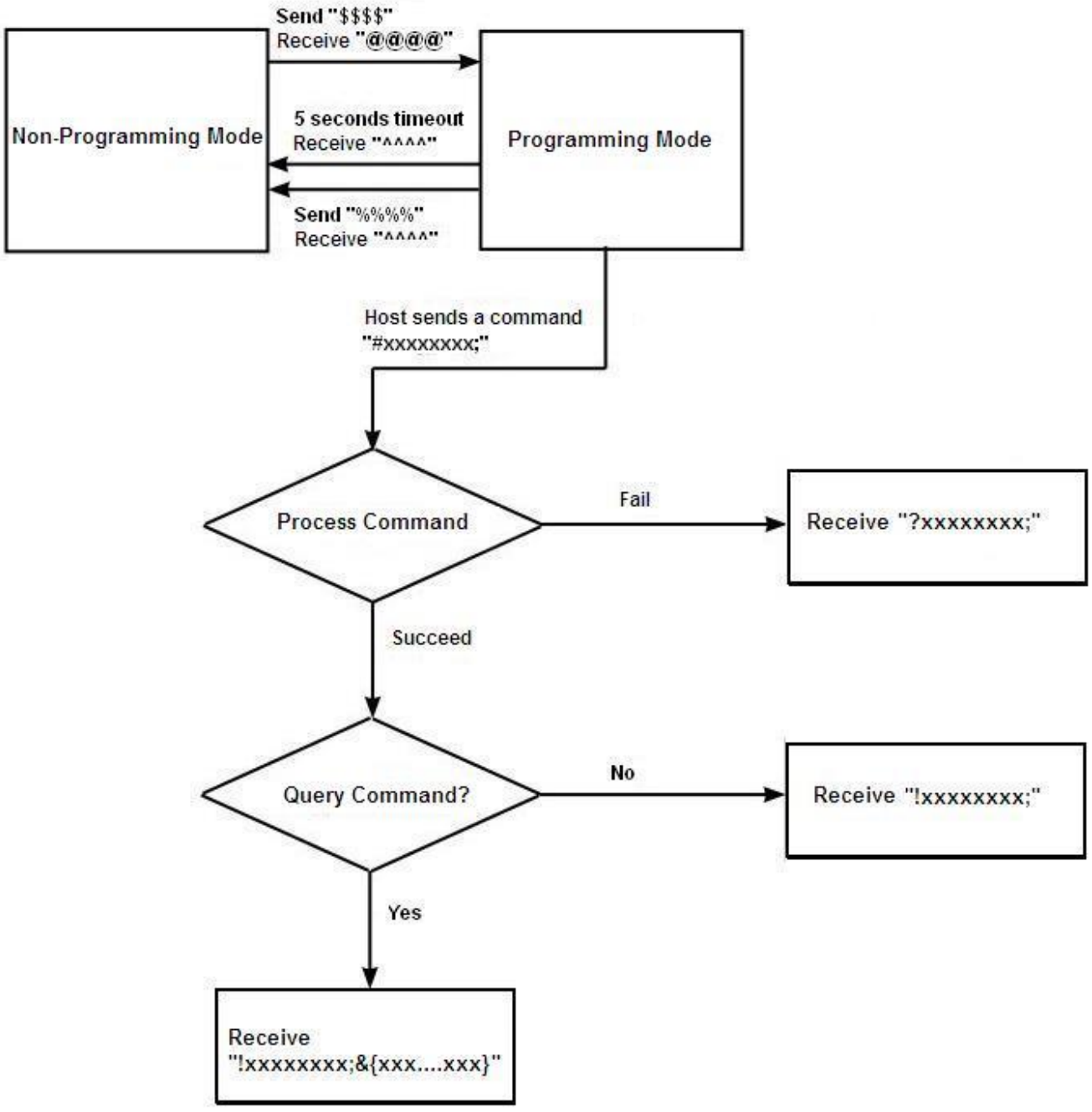

99900032

【Exit Setup】

**【Enter Setup】

Default Settings

Restore Factory Default Settings

Scanning the **Reset Scanner** barcode/the **Reset Cradle** barcode can restore the scanner/cradle to the factory default settings.

You may need to reset your scanner/cradle when:

1. scanner/cradle is not properly configured so that the scanner fails to decode barcodes or to communicate with cradle;

2. you forget previous configuration and want to avoid its impact;

3. functions that are rarely used have been enabled for the time being.

【Reset Scanner】

【Reset Cradle】

【Exit Setup】

**【Enter Setup】

Pairing Settings

Pair Scanner with Cradle

The scanner and cradle must be paired for communication to occur. A cradle can be paired with multiple scanners.

You need to perform this operation manually: After the scanner and cradle are powered on, insert the scanner in the cradle and then press the “M” button on the cradle.

Note: The number of scanners allowed to pair with a cradle varies from one application to another. Consult our technical support if you need more information.

Pair Cradle with Zigbee Router

A CD15 cradle with its DIP switch (see Fig. 1-3) in the “R” position can function as a Zigbee router. You can extend communication distance of the cradle by pairing multiple Zigbee routers with it.

Follow the procedure below to pair a cradle with a Zigbee router: a. Pair a scanner with the cradle; b. Insert the scanner in the Zigbee router and then press the “M” button on the router.

A CD15 cradle with its DIP switch (see Fig. 1-3) in the “C” position works a normal cradle.

Note: The number of Zigbee routers allowed to pair with a cradle varies from one application to another. Consult our technical support if you need more information.

Clear Pairing Settings

Scanning the **Undo Pairing** barcode can delete all pairing information.

【Undo Pairing】

【Exit Setup】

99900031

**【Enter Setup】

Operating Mode Options

99900100

【Power Off】

99900103

【Test Mode[1]】

99900104

【Reboot Scanner】

99900105

【Reboot Cradle】

Note[1]: Pressing the trigger on the scanner or rebooting the device can exit the Test mode.

99900032

【Exit Setup】

**【Enter Setup】

Power-Off Timeout

Power-off timeout specifies the amount of time the scanner remains in sleep mode before it turns off automatically. Scan the barcode below to set this parameter.

**【5 Minutes】

【10 Minutes】

【20 Minutes】

【30 Minutes】

【60 Minutes】

【Disable Auto Power Off】

【Exit Setup】

99900031

**【Enter Setup】

Scan Mode

Manual Mode

Manual Mode (default): A trigger pull activates a decode session. The decode session continues until the barcode is decoded or you release the trigger or the decode session timeout expires (default: 15 seconds; programmable).

99900110

**【Manual Mode】

Decode Session Timeout: This parameter sets the maximum time decode session continues during a scan attempt. The default timeout is 15s.

To program this parameter, scan the **Decode Session Timeout** barcode and the numeric barcodes. To find the numeric barcodes, see the "**Digit Barcodes**" section in Chapter 7.

99900150

【Decode Session Timeout】

Note: Decode Session Timeout: 01-15, corresponding to 1s, 2s, ……, 15s (default), in 1s increments; **00**: infinite.

99900032

【Exit Setup】

**【Enter Setup】

To prevent accidental rereads of the same barcode, you may enable **Reread Same Barcode with a Delay**.

Reread Same Barcode with No Delay: The scanner is allowed to reread the same barcode, ignoring the timeout between decodes (same barcode).

Reread Same Barcode with a Delay: The scanner is not allowed to reread the same barcode before the timeout between decodes (same barcode) expires.

【Reread Same Barcode with a Delay】

**【Reread Same Barcode with No Delay】

Timeout between Decodes (Same Barcode): This parameter sets the minimum time between decodes for the same barcode. It is programmable in 0.1s increments from 0s to 12s. If you want to stop the scanner from rereading the same barcode, set this parameter to 127. The default timeout is 1.6s. To program this parameter, scan the **Timeout between Decodes (Same Barcode)** barcode, the numeric barcode(s) and the **Save** barcode.

Note: Reread Same Barcode with a Delay must be enabled in order for this parameter to function.

【Timeout between Decodes (Same Barcode)】

Example: Set the timeout between decodes (same barcode) to 5s

1. Scan the **Enter Setup** barcode.
2. Scan the **Timeout between Decodes (Same Barcode)** barcode.
3. Scan the numeric barcodes “5” and “0”. (See the **“Digit Barcodes”** section in Chapter 7)
4. Scan the **Save** barcode. (See the “**Save/Cancel Barcodes**” section in Chapter 7)
5. Scan the **Exit Setup** barcode.

【Exit Setup】

99900031

**【Enter Setup】

Auto Mode

Auto Mode: Pressing the trigger activates a decode session. The decode session continues until the barcode is decoded or the decode session timeout expires (default: 15 seconds; programmable). The scanner automatically starts one session after another until you press the trigger a second time.

99900111

【Auto Mode】

99900032

【Exit Setup】

**【Enter Setup】

Decode Session Timeout: This parameter sets the maximum time decode session continues during a scan attempt. The default timeout is 15s.

To program this parameter, scan the **Decode Session Timeout** barcode and the numeric barcodes. To find the numeric barcodes, see the "**Digit Barcodes**" section in Chapter 7.

Note: Decode Session Timeout: 01-15, corresponding to 1s, 2s, ……, 15s (default), in 1s increments; **00**: infinite.

You can also configure whether to allow rereading same barcode. By default, rereading same barcode is not allowed.

【Decode Session Timeout】

**【Disallow Rereading Same Barcode】

【Allow Rereading Same Barcode】

【Recalculate Timeout After Good Read】

- ✧ **Allow Rereading Same Barcode**

  This allows the scanner to reread the same barcode that has been decoded in the previous session.

- ✧ **Disallow Rereading Same Barcode**

  This protects against accidental rereads of the same barcode. If the barcode being scanned is identical with the one previously scanned, the decode session will suspend until a different barcode comes up.

- ✧ **Recalculate Timeout After Good Read**

  The decode session timeout restarts after a good read.

【Exit Setup】

99900031

**【Enter Setup】

Blink Mode

Blink Mode: The scanner automatically activates a decode session. The decode session continues until the barcode is decoded or the decode session timeout expires (100ms; non-programmable). When a decode session is completed, the scanner waits until the timeout between decodes expires (default: 1s, programmable) and then starts next session. The scanner continues to work in this pattern.

Pressing the trigger can also activate a decode session; holding down the trigger can suspend decode session.

Timeout between Decodes: This parameter sets the time period between the end of one decode session and the start of next session. It is programmable in 0.5s increments from 0s to 7.5s. The default timeout is 1s. To program this parameter, scan the **Timeout between Decodes** barcode and the numeric barcodes.

Note: Timeout between Decodes: 00-15, corresponding to 0s, 0.5s, 1s (default), ……, 7.5s, in 0.5s increments.

99900112

【Blink Mode】

99900151

【Timeout between Decodes】

Example: Set the Timeout between Decodes to 5s (level 10)

1. Scan the **Enter Setup** barcode.
2. Scan the **Timeout between Decodes** barcode.
3. Scan the numeric barcodes ”1” and ”0” . (See the **“Digit Barcodes”** section in Chapter 7)
4. Scan the **Exit Setup** barcode.

99900032

【Exit Setup】

99900031

**【Enter Setup】

Sense Mode

Sense Mode: The scanner activates a decode session every time when it detects a change in ambient illumination (excluding the situation when change is detected before the timeout between decodes expires). Decode session continues until the barcode is decoded or the decode session timeout expires.

Pressing the trigger can also activate a decode session. Holding down the trigger can suspend decode session. Same barcode cannot be reread before the timeout between decodes (same barcode) expires.

99900113

【Sense Mode】

Decode Session Timeout: This parameter sets the maximum time decode session continues during a scan attempt. The default timeout is 15s. To program this parameter, scan the **Decode Session Timeout** barcode and the numeric barcodes.

Timeout between Decodes: This parameter sets the time period between the end of one decode session and the start of next session. It is programmable in 0.5s increments from 0s to 7.5s. The default timeout is 1s. To program this parameter, scan the **Timeout between Decodes** barcode and the numeric barcodes.

Note: Decode Session Timeout: 01-15, corresponding to infinite, 1s, 2s,⋯, 15s (default), in 1s increments; **00**: infinite.

Timeout between Decodes: 00-15, corresponding to 0s, 0.5s, 1s (default), ⋯, 7.5s, in 0.5s increments.

99900150

【Decode Session Timeout】

99900151

【Timeout between Decodes】

99900032

【Exit Setup】

**【Enter Setup】

Sensitivity specifies the degree of acuteness of the scanner's response to changes in ambient illumination. The higher the sensitivity, the lower requirement in illumination change to trigger the scanner. You can select an appropriate degree of sensitivity that fits the ambient environment. By default, High Sensitivity is enabled.

**【High Sensitivity】

【Low Sensitivity】

【Medium Sensitivity】

【Custom Sensitivity】

It is recommended not to set the custom sensitivity when one of the other three options can meet your needs.

Note: Sensitivity: 00-0F; the smaller the number, the higher the sensitivity.

Example: Set the sensitivity to level 5

1. Scan the **Enter Setup** barcode.
2. Scan the **Custom Sensitivity** barcode.
3. Scan the numeric barcodes "0" and "5". (See the **"Digit Barcodes"** section in Chapter 7)
4. Scan the **Exit Setup** barcode.

【Exit Setup】

99900031

**【Enter Setup】

Timeout between Decodes (Same Barcode): This parameter sets the minimum time between decodes for the same barcode. It protects against accidental rereads of the same barcode. It is programmable in 0.1s increments from 0s to 12s. If you want to stop the scanner from rereading the same barcode, set this parameter to 127. The default timeout is 1.6s. To program this parameter, scan the **Timeout between Decodes (Same Barcode)** barcode, the numeric barcode(s) and the **Save** barcode.

99900167

【Timeout between Decodes (Same Barcode)】

Note: Timeout between Decodes (Same Barcode): 0-120, corresponding to 0s, 0.1s, ⋯, 1.6s (default), ⋯, 12s, in 0.1s increments; **127**: infinite.

Example: Set the timeout between decodes (same barcode) to 5s

1. Scan the **Enter Setup** barcode.
2. Scan the **Timeout between Decodes (Same Barcode)** barcode.
3. Scan the numeric barcodes “5” and “0”. (See the **“Digit Barcodes”** section in Chapter 7)
4. Scan the **Save** barcode. (See the “**Save/Cancel Barcodes**” section in Chapter 7)
5. Scan the **Exit Setup** barcode.

99900032

【Exit Setup】

99900031

**【Enter Setup】

Continuous Mode

Continuous Mode: The scanner automatically activates a decode session. The decode session continues until the barcode is decoded. When a decode session is completed, the scanner waits until the timeout between decodes expires and then starts next session. The scanner continues to work in this pattern. Same barcode cannot be reread before the timeout between decodes (same barcode) expires.

Holding down the trigger can also activate the scanner to decode continuously, but with no intervals (i.e. timeout between decodes will be ignored).

【Continuous Mode】

99900032

【Exit Setup】

99900031

**【Enter Setup】

Timeout between Decodes: This parameter sets the time period between the end of one decode session and the start of next session. It is programmable in 0.5s increments from 0s to 7.5s. The default timeout is 1s. To program this parameter, scan the **Timeout between Decodes** barcode and the numeric barcodes.

Note: Timeout between Decodes: 00-15, corresponding to 0s, 0.5s, 1s (default), ……, 7.5s, in 0.5s increments.

99900151

【Timeout between Decodes】

Timeout between Decodes (Same Barcode): This parameter sets the minimum time between decodes for the same barcode. It protects against accidental rereads of the same barcode. It is programmable in 0.1s increments from 0s to 12s. If you want to stop the scanner from rereading the same barcode, set this parameter to 127. The default timeout is 1.6s. To program this parameter, scan the **Timeout between Decodes (Same Barcode)** barcode, the numeric barcodes and the **Save** barcode.

Note: Timeout between Decodes (Same Barcode): 0-120, corresponding to 0s, 0.1s, …, 1.6s (default), …, 12s, in 0.1s increments; **127**: infinite.

99900167

【Timeout between Decodes (Same Barcode)】

Example: Set the timeout between decodes (same barcode) to 5s:

1. Scan the **Enter Setup** barcode.
2. Scan the **Timeout between Decodes (Same Barcode)** barcode.
3. Scan the numeric barcodes “5” and “0”. (See the **“Digit Barcodes”** section in Chapter 7)
4. Scan the **Save** barcode. (See the “**Save/Cancel Barcodes**” section in Chapter 7)
5. Scan the **Exit Setup** barcode.

99900032

【Exit Setup】

99900031

**【Enter Setup】

Delayed Sense Mode

Delayed Sense Mode: The scanner automatically activates a decode session when it detects a change in ambient illumination. The decode session continues until the barcode is decoded or the decode session timeout expires. When a decode session is completed, the scanner waits 200ms and then starts to monitor ambient environment until it detects a change to trigger next decode session. Same barcode cannot be reread before the timeout between decodes (same barcode) expires.

99900115

【Delayed Sense Mode】

Decode Session Timeout: This parameter sets the maximum time decode session continues during a scan attempt. To program this parameter, scan the **Decode Session Timeout** barcode and the numeric barcodes.

Timeout between Decodes (Same Barcode): This parameter sets the minimum time between decodes for the same barcode. It protects against accidental rereads of the same barcode. It is programmable in 0.2s increments from 0s to 3s. To program this parameter, scan the **Timeout between Decodes (Same Barcode)** barcode and the numeric barcodes.

Note: Decode Session Timeout: 01-15, corresponding to 2s, 4s,…, 30s, in 2s increments; **00**: infinite.

Timeout between Decodes (Same Barcode): 00-15, corresponding to 0s, 0.2s,…,3s,in 0.2s increments.

99900150

【Decode Session Timeout】

99900151

【Timeout between Decodes (Same Barcode)】

99900032

【Exit Setup】

**【Enter Setup】

Security Setup

This parameter specifies the number of times to decode a barcode during a scan attempt. The higher the security level, the lower the error rate and decoding efficiency. By default, security is set to be level 1.

**【Set Security Level to 1】

【Set Security Level to 3】

【Set Security Level to 2】

【Set Security Level to 4】

【Exit Setup】

99900031

**【Enter Setup】

Good Read Beep

By default, the scanner emits a medium-pitched loud beep that lasts 150ms after good read.

99900130

【Do Not Beep After Good Read】

99900131

【High-Pitched Loud Beep】

99900132

【High-Pitched Medium-Loud Beep】

99900133

【High-Pitched Low Beep】

99900134

**【Medium-Pitched Loud Beep】

99900135

【Medium-Pitched Medium-Loud Beep】

99900136

【Medium-Pitched Low Beep】

99900137

【Low-Pitched Loud Beep】

99900140

【Low-Pitched Medium-Loud Beep】

99900141

【Low-Pitched Low Beep】

99900032

【Exit Setup】

99900031

**【Enter Setup】

99900142

**【Set Beep Length to 150ms】

99900144

【Set Beep Length to 50ms】

99900143

【Set Beep Length to 100ms】

99900032

【Exit Setup】

99900031

**【Enter Setup】

Decode Area and Output Interval

You can set the number of barcodes allowed to be read per scan. By default, the **Read One Barcode Nearest to the Center Per Scan** option is enabled.

You can also set the decoded data output interval. By default, output interval is 0ms.

99904402

【Read 2 Barcodes Per Scan】

99904403

【Read 3 Barcodes Per Scan】

99904404

【Read 4 Barcodes Per Scan】

99904410

**【Set Output Interval to 0ms】

99904411

【Set Output Interval to 50ms】

99904400

**【Read One Barcode Nearest to the Center Per Scan】

99904401

【Read One Barcode At The Center Per Scan】

99904412

【Set Output Interval to 100ms】

99904413

【Set Output Interval to 150ms】

99900032

【Exit Setup】

99900031

**【Enter Setup】

Other Settings

Temporary Mute

99900040

【Enable Temporary Mute】

99900041

【Disable Temporary Mute】

Note: Temporary Mute is only applicable to decode beep and will be disabled after you reboot the scanner.

**【Enter Setup】

Chapter 3 Inquiry Command

Introduction

This chapter provides programming barcodes you may need to obtain device information.

Obtain Scanner Information

You can scan one of the barcodes below to inquire the scanner information. The results will be sent to the Host.

【Inquire All Information About Scanner】

【Inquire the Manufacture Date of Scanner】

【Inquire the Firmware Version of Scanner】

【Inquire the Model Number of Scanner】

【Inquire the Serial Number of Scanner】

【Exit Setup】

**【Enter Setup】

Obtain Cradle Information

You can scan one of the barcodes below to inquire the information about CD15 Cradle. The results will be sent to the Host.

【Inquire All Information About Cradle】

【Inquire the Firmware Version of Cradle】

【Inquire the Serial Number of Cradle】

【Inquire the Manufacture Date of Cradle】

【Inquire the Model Number of Cradle】

【Exit Setup】

99900031

**【Enter Setup】

Obtain Wireless Module Information

You can scan one of the barcodes below to inquire the information about wireless module. The results will be sent to the Host.

99904301

【Inquire the Number of Barcodes in Flash Memory】

99904303

【Delete All Barcodes in Flash Memory】

99904304

【Inquire the Wireless Module Status】

Note: Inquire the Wireless Module Status: Inquire wireless connection status and communication mode.

99900032

【Exit Setup】

**【Enter Setup】

Chapter 4 Communication Settings

Introduction

Three types of wireless communication between scanner and cradle: synchronous, asynchronous and batch modes.
Two types of wired communication between cradle and the Host: RS-232 and USB.

Wireless Communication Setup

Wireless communication modes include Synchronous (default), Asynchronous and Batch modes.

- ✧ **Synchronous Mode:** If Zigbee is available, scanned data will be transferred to the cradle immediately after a good read; if Zigbee is unavailable, the transmission of decoded data cannot be accomplished.
- ✧ **Asynchronous Mode:** If Zigbee is available, scanned data will be transferred to the cradle immediately after a good read; if Zigbee is unavailable, scanned data will be first stored in the flash memory and be sent automatically to the cradle in a FIFO (first in first out) manner when Zigbee becomes available. All stored data will be automatically deleted after transmission.
- ✧ **Batch Mode:** Scanned data will be stored in the flash memory no matter whether Zigbee is available or not. To send the stored data to the cradle, you need to insert the scanner in the cradle and then press “P” button on the cradle. By default, all stored data will be automatically deleted after transmission.

**【Synchronous Mode】

【Asynchronous Mode】

【Batch Mode】

【Exit Setup】

**【Enter Setup】

Host Acknowledgment

Some applications require that the host device validate incoming barcode data and provide acknowledgment to the scanner. When Host Acknowledgment is turned on, the scanner waits for this acknowledgment after each scan. If scanned data is deemed valid, the host device returns 0x06 and the green LED on the scanner flashes thrice along with the Validation Passed beep; if the data is deemed invalid, the host device returns 0x15 and the red LED on the scanner flashes thrice along with the Validation Failed beep. This feature is only available in the Synchronous mode.

**【Host Acknowledgment Off】

【Host Acknowledgment On】

Host Acknowledgment Timeout specifies the maximum time the scanner waits for the acknowledgment from the host device.

【Host Acknowledgment Timeout 1s】

**【Host Acknowledgment Timeout 3s】

【Host Acknowledgment Timeout 5s】

【Host Acknowledgment Timeout 60s】

【Host Acknowledgment Timeout 120s】

【Exit Setup】

**【Enter Setup】

Advanced Settings for the Batch Mode

Keep/Delete Stored Data after Batch Transmission

You may scan the appropriate barcode below to choose whether to keep or delete stored data in the flash memory after batch transmission (i.e. data transmission in the Batch mode).

**【Auto Delete Stored Data after Transmission】

【Keep Stored Data after Transmission】

Batch Mode Same Barcode Reading

This feature is available only when scanning barcodes in the Batch mode.

Enable Batch Mode Same Barcode Reading: The scanner stores the data when encountering a barcode that has existed in the flash memory.

Disable Batch Mode Same Barcode Reading: The scanner discards the data and generates an error beep when encountering a barcode that has existed in the flash memory.

**【Enable Batch Mode Same Barcode Reading】

【Disable Batch Mode Same Barcode Reading】

【Exit Setup】

**【Enter Setup】

Batch Mode Transmit Delay

Sometimes when multiple barcodes are sent to the host device in the Batch mode, the transmission of those barcodes is too fast for the application to process. To program a transmit delay between barcodes, scan one of the following delays.

**【No Transmit Delay (0ms)】

【Short Transmit Delay (50ms)】

【Medium Transmit Delay (100ms)】

【Long Transmit Delay (150ms)】

【Exit Setup】

**【Enter Setup】

RS-232 Interface on CD15 Cradle

Baud Rate

When the CD15 cradle is connected to the Host via serial port, you need to set communication parameters (including baud rate, parity check, data bit and stop bit) to match the host device.

Baud rate is the number of bits of data transmitted per second. Set the cradle's baud rate to match the Host requirements. Otherwise, data may not reach the Host or may reach it in distorted form. The default baud rate is 115200.

【Baud Rate 1200】

【Baud Rate 2400】

【Baud Rate 4800】

【Baud Rate 9600】

【Baud Rate 14400】

【Baud Rate 19200】

【Baud Rate 38400】

【Baud Rate 57600】

**【Baud Rate 115200】

【Exit Setup】

**【Enter Setup】

Parity Check

By default, the **None** option is enabled.

**【None】

【Even】

【Odd】

Stop Bit

By default, the **1 Stop Bit** option is enabled.

**【1 Stop Bit】

【2 Stop Bits】

【Exit Setup】

99900031

**【Enter Setup】

Flow Control

By default, the **No Flow Control** option is enabled.

99902140

**【No Flow Control】

99902142

【CTS Flow Control】

99902141

【RTS Flow Control】

99902143

【RTS_CTS Flow Control】

99900032

【Exit Setup】

**【Enter Setup】

Data Bit

By default, the **8 Data Bits** option is enabled.

**【8 Data Bits】

【8 Data Bits, No Parity, 2 Stop Bits】

【8 Data Bits, No Parity, 1 Stop Bit】

【8 Data Bits, Even Parity, 2 Stop Bits】

【8 Data Bits, Even Parity, 1 Stop Bit】

【8 Data Bits, Odd Parity, 2 Stop Bits】

【8 Data Bits, Odd Parity, 1 Stop Bit】

【Exit Setup】

99900031

**【Enter Setup】

USB Interface on CD15 Cradle

By default, the **USB HID-KBW** option is enabled.

USB HID-KBW

99902300

**【USB HID-KBW】

USB COM Port Emulation

99902301

【USB COM Port Emulation】

99900032

【Exit Setup】

99900031

**【Enter Setup】

Keyboard Parameters

Examine KBW Connection

By default, the cradle examines whether KBW connection is available before data transmission by sending the Caps Lock key to the host device first.

99902223

**【Examine KBW Connection】

99902224

【Do Not Examine KBW Connection】

USB Enumeration

By default, the cradle will be enumerated after power-up.

99970140

【USB Enumeration Off】

99970141

**【USB Enumeration On】

99900032

【Exit Setup】

99900031

**【Enter Setup】

Keyboard Layout

By default, the **US (English)** option is enabled

99902201

** 【US (English)】

99902202

【Japanese】

99902203

【Denmark】

99902204

【Finland】

99902205

【France】

99902206

【Turkey F】

99902207

【Italy】

99902210

【Norway】

99902211

【Spain】

99902212

【Turkey Q】

99900032

【Exit Setup】

99900031

**【Enter Setup】

99902213

【UK】

99902214

【German】

99902215

【Belgium】

99902216

【Russia】

99902217

【Sweden】

99902200

【Portugal】

99900032

【Exit Setup】

99900031

**【Enter Setup】

Inter-Character Delay

Inter-character Delay: 00-15 (16 levels), corresponding to 0ms (default), 5ms, 10ms, ⋯, 75ms, in 5ms increments.

99902220

【Inter-Character Delay】

Convert Case

By default, the **No Case Conversion** option is enabled.

99902230

**【No Case Conversion】

99902232

【Convert All to Lowercase】

99902231

【Convert All to Uppercase】

99902233

【Invert Upper and Lower Case Characters】

99900032

【Exit Setup】

**【Enter Setup】

Emulate ALT+Keypad

This feature allows any ASCII character (0x00 - 0xFF) to be sent over the numeric keypad no matter which keyboard type is selected. Since sending a character involves multiple keystroke emulations, this method appears less efficient.

The following options are available:

- **Disable:** No ASCII character is sent in the ALT+Keypad way.
- **Mode 1:** ASCII characters not supported by the selected keyboard type but falling into 0x20~0xFF are sent in the ALT+Keypad way.
- **Mode 2:** ASCII characters falling into 0x20~0xFF are sent in the ALT+Keypad way.
- **Mode 3:** All ASCII characters (0x00~0xFF) are sent in the ALT+Keypad way.

Note: In the event of a conflict between **Function Key Mapping** and **Mode 3**, **Function Key Mapping** shall govern.

**【Disable】

【Mode 1】

【Mode 2】

【Mode 3】

Example: Supposing US keyboard is selected, barcode data ”AÐF” (65/208/70) is sent as below:

(1) **Mode 1** is enabled:

“A” -- Keystroke “A”

“Ð” -- “ALT Make” + “208” + “ALT Break”

“F” -- Keystroke “F”

(2) **Mode 3** is enabled:

“A” – “ALT Make” + “065” + “ALT Break”

“Ð” -- “ALT Make” + “208” + “ALT Break”

“F” -- “ALT Make” + “070” + “ALT Break”

【Exit Setup】

99900031

**【Enter Setup】

Function Key Mapping

When Function Key Mapping is enabled, function characters (0x00 - 0x1F) are sent as ASCII sequences over the keypad. For more information, see **ASCII Function Key Mapping Table** in Appendix.

99902265

【Enable Function Key Mapping】

99902264

**【Disable Function Key Mapping】

Example: Barcode data 0x16

T	Enable Function Key Mapping	Ctrl+V
	Disable Function Key Mapping	F1

99900032

【Exit Setup】

**【Enter Setup】

Emulate Numeric Keypad

When this feature is disabled, sending barcode data is emulated as keystroke(s) on main keyboard.

To enable this feature, scan the Emulate Numeric Keypad barcode. Sending a number (0-9) is emulated as keystroke(s) on numeric keypad, whereas sending other character like “+”, “_”, “*” , “/” and “.” is still emulated as keystrokes on main keyboard.

**【Do Not Emulate Numeric Keypad】

【Emulate Numeric Keypad】

【Exit Setup】

**【Enter Setup】

Reliability of Communication between Cradle and PC

Reliable communication between cradle and PC via RS-232 interface can be achieved with the flow control feature; Reliable communication between cradle and PC via USB interface can be guaranteed by the USB protocol.

【Exit Setup】

**【Enter Setup】

Chapter 5 Prefix & Suffix

Introduction

After a successful barcode reading, a string containing numbers, letters or symbols will be returned.

In real applications, barcode data may be found insufficient for your needs. You may wish to include additional information such as barcode type, data acquisition time or delimiter in data being scanned.

Adding extra information to printed barcodes does not seem like a sensible solution since that will increase the barcode size and make them inflexible. Instead, we come up with the idea of appending prefix and suffix to the data without making any change to barcodes. We will show you how to conduct the configuration in the following sections.

Note: Customized data: <Prefix> <Data><Suffix><Terminating Character>

Prefix Sequence

By default, the **Code ID+Custom+AIM ID** option is enabled.

**【Code ID+Custom+AIM ID】

【Custom+Code ID+AIM ID】

【Exit Setup】

**【Enter Setup】

Custom Prefix

Enable/Disable Custom Prefix

If custom prefix is enabled, you are allowed to append to the data a user-defined prefix that cannot exceed 11 characters. By default, custom prefix is disabled.

For example, if barcode data is “123” and custom prefix is “AB”, the Host will receive “AB123”.

**【Disable Custom Prefix】

【Enable Custom Prefix】

Set Custom Prefix

To set a custom prefix, scan the **Set Custom Prefix** barcode, the numeric barcodes corresponding to the hexadecimal value of a desired prefix and the **Save** barcode.

Note: A custom prefix cannot exceed 11 characters.

【Set Custom Prefix】

Example: set the custom prefix to “CODE” (its hexadecimal value is 0x43/0x4F/0x44/0x45)

1. Scan the **Enter Setup** barcode.
2. Scan the **Set Custom Prefix** barcode.
3. Scan the numeric barcodes “4”,“3”,“4”,“F”,“4”,“4”,“4” and “5”. (See the “**Digit Barcodes**” section in Chapter 7)
4. Scan the **Save** barcode. (See the “**Save/Cancel Barcodes**” section in Chapter 7)
5. Scan the **Enable Custom Prefix** barcode.
6. Scan the **Exit Setup** barcode.

【Exit Setup】

**【Enter Setup】

AIM ID Prefix

AIM (Automatic Identification Manufacturers) ID defines symbology identifier (For the details, see the "**AIM ID Table**" section in Chapter 7). If AIM ID prefix is enabled, the scanner will add the symbology identifier before the scanned data after decoding. By default, AIM ID prefix is disabled.

**【Disable AIM ID Prefix】

【Enable AIM ID Prefix】

Code ID Prefix

Code ID can also be used to identify barcode type. Unlike AIM ID, Code ID is user programmable. To learn how to program it, see the "**Set Code ID**" sections in Chapter 6. For the information of default Code ID, see the "**Code ID Table**" section in Chapter 7. By default, Code ID prefix is disabled.

**【Disable Code ID Prefix】

【Restore Default Code IDs】

【Enable Code ID Prefix】

【Exit Setup】

**【Enter Setup】

Custom Suffix

Enable/Disable Custom Suffix

If custom suffix is enabled, you are allowed to append to the data a user-defined suffix that cannot exceed 11 characters. By default, custom suffix is disabled.

For example, if barcode data is “123” and custom suffix is “AB”, the Host will receive “123AB”.

**【Disable Custom Suffix】

【Enable Custom Suffix】

Set Custom Suffix

To set a custom suffix, scan the **Set Custom Suffix** barcode, the numeric barcodes corresponding to the hexadecimal value of a desired suffix and the **Save** barcode.

Note: A custom suffix cannot exceed 11 characters.

【Set Custom Suffix】

Example: Set the custom suffix to “AGE” (its hexadecimal value is 0x41/0x47/0x45)

1. Scan the **Enter Setup** barcode.
2. Scan the **Set Custom Suffix** barcode.
3. Scan the numeric barcodes “4”“1”“4”“7”“4” and “5”. (See the “**Digit Barcodes**” section in Chapter 7)
4. Scan the **Save** barcode. (See the “**Save/Cancel Barcodes**” section in Chapter 7)
5. Scan the **Enable Custom Suffix** barcode.
6. Scan the **Exit Setup** barcode.

【Exit Setup】

99900031

**【Enter Setup】

Terminating Character Suffix

Enable/Disable Terminating Character Suffix

A terminating character such as carriage return (CR) or carriage return/line feed pair (CRLF) can only be used to mark the end of data, which means nothing can be added after it. By default, terminating character suffix is enabled.

99904110

【Disable Terminating Character Suffix】

99904111

**【Enable Terminating Character Suffix】

99900032

【Exit Setup】

**【Enter Setup】

Set Terminating Character Suffix

To set a terminating character suffix, scan the **Set Terminating Character Suffix** barcode, the numeric barcodes corresponding to the hexadecimal value of a desired terminating character and the **Save** barcode. By default, terminating character 0x0D,0x0A is enabled.

【Set Terminating Character Suffix】

【Terminating Character 0x0D】

【Terminating Character 0x0D,0x0A】

Example: Set the terminating character to "0x0A"

1. Scan the **Enter Setup** barcode.
2. Scan the **Set Terminating Character Suffix** barcode.
3. Scan the numeric barcodes "0" and "A". (See the "**Digit Barcodes**" section in Chapter 7)
4. Scan the **Save** barcode. (See the "**Save/Cancel Barcodes**" section in Chapter 7)
5. Scan the **Exit Setup** barcode.

If terminating character suffix is enabled, after finishing the above configuration an LF character will be added after scanned data.

Note: Under the Windows operating system, you can quickly set terminating character suffix to 0x0D or 0x0D,0x0A by scanning the appropriate barcode above.

【Exit Setup】

**【Enter Setup】

Chapter 6 Symbologies

Introduction

Every symbology (barcode type) has its own unique attributes. This chapter provides programming barcodes for configuring the scanner so that it can identify various barcode symbologies. It is recommended to disable those that are rarely used to increase the efficiency of the scanner.

【Exit Setup】

99900031

**【Enter Setup】

Code 128

Restore Default Settings

Scan the barcode below to restore all parameters in Code 128 configuration to the factory default settings. To find the related default settings, see the "**Default Parameters Table**" section in Chapter 7.

99910000

【Restore the Default Settings of Code 128】

Enable/Disable Code 128

Code 128 is enabled by default.

99910002

**【Enable Code 128】

99910001

【Disable Code 128】

Note: If the scanner fails to identify Code 128 barcodes, you may first try this solution by scanning the **Enter Setup** barcode and then **Enable Code 128** barcode.

99900031

**【Enter Setup】

Set Code ID

Code ID can only consist of one or two English letters. See the "**Code ID Table**" section in Chapter 7 to find the default Code ID for Code 128.

To set the Code ID, scan the **Set Code ID for Code 128** barcode, the numeric barcodes corresponding to the hexadecimal value of a desired ID and the **Save** barcode.

【Set Code ID for Code 128】

Example: Set the Code ID of Code 128 to "p" (its hexadecimal value is 0x70)

1. Scan the **Enter Setup** barcode.
2. Scan the **Set Code ID for Code 128** barcode.
3. Scan the numeric barcodes "7" and "0". (See the "**Digit Barcodes**" section in Chapter 7)
4. Scan the **Save** barcode. (See the "**Save/Cancel Barcodes**" section in Chapter 7)
5. Scan the **Exit Setup** barcode.

99900032

【Exit Setup】

99900031

**【Enter Setup】

Set Length Range for Code 128

The scanner can be configured to only decode Code 128 barcodes with lengths that fall between (inclusive) the minimum and maximum lengths. To accomplish it, you need to set the minimum and maximum lengths.

If minimum length is set to be greater than maximum length, the scanner only decodes Code 128 barcodes with either the minimum or maximum length. If minimum length is same as maximum length, only Code 128 barcodes with that length are to be decoded.

99910003

【Set the Minimum Length】

99910004

【Set the Maximum Length】

Example: Set the scanner to decode Code128 barcodes containing between 8 and 12 characters

1. Scan the **Enter Setup** barcode.
2. Scan the **Set the Minimum Length** barcode.
3. Scan the numeric barcode “8”. (See the “**Digit Barcodes**” section in Chapter 7)
4. Scan the **Save** barcode. (See the “**Save/Cancel Barcodes**” section in Chapter 7)
5. Scan the **Set the Maximum Length** barcode.
6. Scan the numeric barcodes “1” and “2”.
7. Scan the **Save** barcode.
8. Scan the **Exit Setup** barcode.

99900031

**【Enter Setup】

UCC/EAN-128

Restore Default Settings

Scan the barcode below to restore all parameters in UCC/EAN-128 configuration to the factory default settings. To find the related default settings, see the "**Default Parameters Table**" section in Chapter 7.

99910100

【Restore the Default Settings of UCC/EAN-128】

Enable/Disable UCC/EAN-128

UCC/EAN-128 is enabled by default.

99910102

**【Enable UCC/EAN-128】

99910101

【Disable UCC/EAN-128】

Note: If the scanner fails to identify UCC/EAN-128 barcodes, you may first try this solution by scanning the **Enter Setup** barcode and then **Enable UCC/EAN-128** barcode.

99900032

99900031

**【Enter Setup】

Set Code ID

Code ID can only consist of one or two English letters. See the "**Code ID Table**" section in Chapter 7 to find the default Code ID for UCC/EAN-128.

To set the Code ID, scan the **Set Code ID for UCC/EAN-128** barcode, the numeric barcodes corresponding to the hexadecimal value of a desired ID and the **Save** barcode.

99910105

【Set Code ID for UCC/EAN-128】

Example: Set the Code ID of UCC/EAN-128 to "p" (its hexadecimal value is 0x70)

1. Scan the **Enter Setup** barcode.
2. Scan the **Set Code ID for UCC/EAN-128** barcode.
3. Scan the numeric barcodes "7" and "0". (See the "**Digit Barcodes**" section in Chapter 7)
4. Scan the **Save** barcode. (See the "**Save/Cancel Barcodes**" section in Chapter 7)
5. Scan the **Exit Setup** barcode.

99900032

【Exit Setup】

**【Enter Setup】

Set Length Range for UCC/EAN-128

The scanner can be configured to only decode UCC/EAN-128 barcodes with lengths that fall between (inclusive) the minimum and maximum lengths. To accomplish it, you need to set the minimum and maximum lengths.

If minimum length is set to be greater than maximum length, the scanner only decodes UCC/EAN-128 barcodes with either the minimum or maximum length. If minimum length is same as maximum length, only UCC/EAN-128 barcodes with that length are to be decoded.

【Set the Minimum Length】

【Set the Maximum Length】

Example: Set the scanner to decode UCC/EAN-128 barcodes containing between 8 and 12 characters

1. Scan the **Enter Setup** barcode.
2. Scan the **Set the Minimum Length** barcode.
3. Scan the numeric barcode “8”. (See the “**Digit Barcodes**” section in Chapter 7)
4. Scan the **Save** barcode. (See the “**Save/Cancel Barcodes**” section in Chapter 7)
5. Scan the **Set the Maximum Length** barcode.
6. Scan the numeric barcodes “1” and “2”.
7. Scan the **Save** barcode.
8. Scan the **Exit Setup** barcode.

【Exit Setup】

99900031

**【Enter Setup】

AIM 128

Restore Default Settings

Scan the barcode below to restore all parameters in AIM 128 configuration to the factory default settings. To find the related default settings, see the "**Default Parameters Table**" section in Chapter 7.

99910200

【Restore the Default Settings of AIM 128】

Enable/Disable AIM 128

AIM 128 is disabled by default.

99910202

【Enable AIM 128】

99910201

**【Disable AIM 128】

Note: If the scanner fails to identify AIM 128 barcodes, you may first try this solution by scanning the **Enter Setup** barcode and then **Enable AIM 128** barcode.

Set Code ID

Code ID can only consist of one or two English letters. See the "**Code ID Table**" section in Chapter 7 to find the default Code ID for AIM 128.

To set the Code ID, scan the **Set Code ID for AIM 128** barcode, the numeric barcodes corresponding to the hexadecimal value of a desired ID and the **Save** barcode.

99910205

【Set Code ID for AIM 128】

Example: Set the Code ID of AIM-128 to "p" (its hexadecimal value is 0x70)

1. Scan the **Enter Setup** barcode.
2. Scan the **Set Code ID for AIM-128** barcode.
3. Scan the numeric barcodes "7" and "0". (See the "**Digit Barcodes**" section in Chapter 7)
4. Scan the **Save** barcode. (See the "**Save/Cancel Barcodes**" section in Chapter 7)
5. Scan the **Exit Setup** barcode.

99900031

**【Enter Setup】

Set Length Range for AIM 128

The scanner can be configured to only decode AIM 128 barcodes with lengths that fall between (inclusive) the minimum and maximum lengths. To accomplish it, you need to set the minimum and maximum lengths.

Both lengths can range from 1 to 255 characters. If minimum length is set to be greater than maximum length, the scanner only decodes AIM 128 barcodes with either the minimum or maximum length. If minimum length is same as maximum length, only AIM 128 barcodes with that length are to be decoded. The default minimum and maximum lengths are 1 character and 255 characters respectively.

99910203

【Set the Maximum Length】

99910204

【Set the Minimum Length】

Example: Set the scanner to decode AIM128 barcodes containing between 8 and 12 characters

1. Scan the **Enter Setup** barcode.
2. Scan the **Set the Minimum Length** barcode.
3. Scan the numeric barcode “8”. (See the “**Digit Barcodes**” section in Chapter 7)
4. Scan the **Save** barcode. (See the “**Save/Cancel Barcodes**” section in Chapter 7)
5. Scan the **Set the Maximum Length** barcode.
6. Scan the numeric barcodes “1” and “2”.
7. Scan the **Save** barcode.
8. Scan the **Exit Setup** barcode.

99900031

**【Enter Setup】

EAN-8

Restore Default Settings

Scan the barcode below to restore all parameters in EAN-8 configuration to the factory default settings. To find the related default settings, see the "**Default Parameters Table**" section in Chapter 7.

【Restore the Default Settings of EAN-8】

Enable/Disable EAN-8

EAN-8 is enabled by default.

**【Enable EAN-8】

【Disable EAN-8】

Note: If the scanner fails to identify EAN-8 barcodes, you may first try this solution by scanning the **Enter Setup** barcode and then **Enable EAN-8** barcode.

99900032

【Exit Setup】

99900031

**【Enter Setup】

Set Code ID

Code ID can only consist of one or two English letters. See the "**Code ID Table**" section in Chapter 7 to find the default Code ID for EAN-8.

To set the Code ID, scan the **Set Code ID for EAN-8** barcode, the numeric barcodes corresponding to the hexadecimal value of a desired ID and the **Save** barcode.

【Set Code ID for EAN-8】

Example: Set the Code ID of EAN-8 to "p" (its hexadecimal value is 0x70)

1. Scan the **Enter Setup** barcode.
2. Scan the **Set Code ID for EAN-8** barcode.
3. Scan the numeric barcodes "7" and "0". (See the "**Digit Barcodes**" section in Chapter 7)
4. Scan the **Save** barcode. (See the "**Save/Cancel Barcodes**" section in Chapter 7)
5. Scan the **Exit Setup** barcode.

99900032

【Exit Setup】

99900031

**【Enter Setup】

2-Digit Add-On Code

An EAN-8 barcode can be augmented with a two-digit add-on code to form a new one..

99910405

**【Disable 2-Digit Add-On Code】

99910406

【Enable 2-Digit Add-On Code】

99910407

【Decode EAN-8 + 2-Digit Add-On Code Only】

Note:

- ✧ **Disable 2-Digit Add-On Code:** The scanner decodes EAN-8 and ignores the add-on code when presented with an EAN-8 plus 2-digit add-on barcode. It can also decode EAN-8 barcodes without 2-digit add-on codes.
- ✧ **Enable 2-Digit Add-On Code:** The scanner decodes a mix of EAN-8 barcodes with and without 2-digit add-on codes.
- ✧ **Decode EAN-8 + 2-Digit Add-On Code Only:** The scanner only decodes EAN-8 barcodes that contain 2-digit add-on codes.

99900032

【Exit Setup】

99900031

**【Enter Setup】

5-Digit Add-On Code

An EAN-8 barcode can be augmented with a five-digit add-on code to form a new one.

99910410

**【Disable 5-Digit Add-On Code】

99910411

【Enable 5-Digit Add-On Code】

99910412

【Decode EAN-8 + 5-Digit Add-On Code Only】

Note:

- ✧ **Disable 5-Digit Add-On Code:** The scanner decodes EAN-8 and ignores the add-on code when presented with an EAN-8 plus 5-digit add-on barcode. It can also decode EAN-8 barcodes without 5-digit add-on codes.
- ✧ **Enable 5-Digit Add-On Code:** The scanner decodes a mix of EAN-8 barcodes with and without 5-digit add-on codes.
- ✧ **Decode EAN-8 + 5-Digit Add-On Code Only:** The scanner only decodes EAN-8 barcodes that contain 5-digit add-on codes.

99900031

**【Enter Setup】

EAN-8 Extension

- ✧ **Disable EAN-8 Zero Extend:** Transmit EAN-8 barcodes as is.
- ✧ **Enable EAN-8 Zero Extend:** Add five leading zeros to decoded EAN-8 barcodes to extend to13 digits.
- ✧ **Convert EAN-8 to EAN-13:** Add five leading zeros to decoded EAN-8 barcodes to make them compatible in format to EAN-13 barcodes.

99910413

**【Disable EAN-8 Zero Extend】

99910414

【Enable EAN-8 Zero Extend】

99910415

【Convert EAN-8 to EAN-13】

Transmit Check Digit

EAN-8 is 8 digits in length with the last one as its check digit used to verify the integrity of the data. By default, the scanner transmits EAN-8 check digit.

99910404

**【Transmit EAN-8 Check Digit】

99910403

【Do Not Transmit EAN-8 Check Digit】

99900032

【Exit Setup】

99900031

**【Enter Setup】

EAN-13

Restore Default Settings

Scan the barcode below to restore all parameters in EAN-13 configuration to the factory default settings. To find the related default settings, see the "**Default Parameters Table**" section in Chapter 7.

【Restore the Default Settings of EAN-13】

Enable/Disable EAN-13

EAN-13 is enabled by default.

**【Enable EAN-13】

【Disable EAN-13】

Note: If the scanner fails to identify EAN-13 barcodes, you may first try this solution by scanning the **Enter Setup** barcode and then **Enable EAN-13** barcode.

99900032

【Exit Setup】

99900031

**【Enter Setup】

Transmit Check Digit

EAN-13 is 13 digits in length with the last one as its check digit used to verify the integrity of the data. By default, the scanner transmits EAN-13 check digit.

99910504

**【Transmit EAN-13 Check Digit】

99910503

【Do Not Transmit EAN-13 Check Digit】

Set Code ID

Code ID can only consist of one or two English letters. See the "**Code ID Table**" section in Chapter 7 to find the default Code ID for EAN-13.

To set the Code ID, scan the **Set Code ID for EAN-13** barcode, the numeric barcodes corresponding to the hexadecimal value of a desired ID and the **Save** barcode.

99910513

【Set Code ID for EAN-13】

Example: Set the Code ID of EAN-13 to "p" (its hexadecimal value is 0x70)

1. Scan the **Enter Setup** barcode.
2. Scan the **Set Code ID for EAN-13** barcode.
3. Scan the numeric barcodes "7" and "0". (See the "**Digit Barcodes**" section in Chapter 7)
4. Scan the **Save** barcode. (See the "**Save/Cancel Barcodes**" section in Chapter 7)
5. Scan the **Exit Setup** barcode.

99900032

【Exit Setup】

99900031

**【Enter Setup】

2-Digit Add-On Code

An EAN-13 barcode can be augmented with a two-digit add-on code to form a new one.

99910505

**【Disable 2-Digit Add-On Code】

99910506

【Enable 2-Digit Add-On Code】

99910507

【Decode EAN-13 + 2-Digit Supplement Only】

Note:

- ✧ **Disable 2-Digit Add-On Code:** The scanner decodes EAN-13 and ignores the add-on code when presented with an EAN-13 plus 2-digit add-on barcode. It can also decode EAN-13 barcodes without 2-digit add-on codes.
- ✧ **Enable 2-Digit Add-On Code:** The scanner decodes a mix of EAN-13 barcodes with and without 2-digit add-on codes.
- ✧ **Decode EAN-13 + 2-Digit Add-On Code Only:** The scanner only decodes EAN-13 barcodes that contain 2-digit add-on codes.

99900031

**【Enter Setup】

5-Digit Add-On Code

An EAN-13 barcode can be augmented with a five-digit add-on code to form a new one.

**【Disable 5-Digit Add-On Code】

【Enable 5-Digit Add-On Code】

【Decode EAN-13 + 5-Digit Add-On Code Only】

Note:

- ✧ **Disable 5-Digit Add-On Code:** The scanner decodes EAN-13 and ignores the add-on code when presented with an EAN-13 plus 5-digit add-on barcode. It can also decode EAN-13 barcodes without 5-digit add-on codes.
- ✧ **Enable 5-Digit Add-On Code:** The scanner decodes a mix of EAN-13 barcodes with and without 5-digit add-on codes.
- ✧ **Decode EAN-13 + 5-Digit Add-On Code Only:** The scanner only decodes EAN-13 barcodes that contain 5-digit add-on codes.

99900031

**【Enter Setup】

EAN-13 Beginning with 290 Add-On Code Required

This setting programs the scanner to require an add-on code (2-digit or 5-digit) on EAN-13 barcodes that begin with “290”. The following settings can be programmed:

Require Add-On Code: All EAN-13 barcodes that begin with “290” must have a 2-digit or 5-digit add-on code. The EAN-13 barcode with the add-on code is then transmitted. If the required add-on code is not found, the EAN-13 barcode is discarded.

Do Not Require Add-On Code: If you have selected **Require Add-On Code**, and you want to disable this feature, scan **Do Not Require Add-On Code**. EAN-13 barcodes are handled, depending on your selection for the “2 or 5-Digit Add-On Code” feature.

99910530

【Require Add-On Code】

99910531

**【Do Not Require Add-On Code】

EAN-13 Beginning with 378/379 Add-On Code Required

This setting programs the scanner to require an add-on code (2-digit or 5-digit) on EAN-13 barcodes that begin with a “378” or “379”. The following settings can be programmed:

Require Add-On Code: All EAN-13 barcodes that begin with a “378” or “379” must have a 2-digit or 5-digit add-on code. The EAN-13 barcode with the add-on code is then transmitted. If the required add-on code is not found, the EAN-13 barcode is discarded.

Do Not Require Add-On Code: If you have selected **Require Add-On Code**, and you want to disable this feature, scan **Do Not Require Add-On Code**. EAN-13 barcodes are handled, depending on your selection for the “2 or 5-Digit Add-On Code” feature.

99910517

【Require Add-On Code】

99910522

**【Do Not Require Add-On Code】

99900032

【Exit Setup】

**【Enter Setup】

EAN-13 Beginning with 414/419 Add-On Code Required

This setting programs the scanner to require an add-on code (2-digit or 5-digit) on EAN-13 barcodes that begin with a “414” or “419”. The following settings can be programmed:

Require Add-On Code: All EAN-13 barcodes that begin with a “414” or “419” must have a 2-digit or 5-digit add-on code. The EAN-13 barcode with the add-on code is then transmitted. If the required add-on code is not found, the EAN-13 barcode is discarded.

Do Not Require Add-On Code: If you have selected **Require Add-On Code**, and you want to disable this feature, scan **Do Not Require Add-On Code**. EAN-13 barcodes are handled, depending on your selection for the “2 or 5-Digit Add-On Code” feature.

【Require Add-On Code】

**【Do Not Require Add-On Code】

EAN-13 Beginning with 434/439 Add-On Code Required

This setting programs the scanner to require an add-on code (2-digit or 5-digit) on EAN-13 barcodes that begin with a “434” or “439”. The following settings can be programmed:

Require Add-On Code: All EAN-13 barcodes that begin with a “434” or “439” must have a 2-digit or 5-digit add-on code. The EAN-13 barcode with the add-on code is then transmitted. If the required add-on code is not found, the EAN-13 barcode is discarded.

Do Not Require Add-On Code: If you have selected **Require Add-On Code**, and you want to disable this feature, scan **Do Not Require Add-On Code**. EAN-13 barcodes are handled, depending on your selection for the “2 or 5-Digit Add-On Code” feature.

【Require Add-On Code】

**【Do Not Require Add-On Code】

【Exit Setup】

99900031

**【Enter Setup】

EAN-13 Beginning with 977 Add-On Code Required

This setting programs the scanner to require an add-on code (2-digit or 5-digit) on EAN-13 barcodes that begin with “977”. The following settings can be programmed:

Require Add-On Code: All EAN-13 barcodes that begin with “977” must have a 2-digit or 5-digit add-on code. The EAN-13 barcode with the add-on code is then transmitted. If the required add-on code is not found, the EAN-13 barcode is discarded.

Do Not Require Add-On Code: If you have selected **Require Add-On Code**, and you want to disable this feature, scan **Do Not Require Add-On Code**. EAN-13 barcodes are handled, depending on your selection for the “2 or 5-Digit Add-On Code” feature.

99910524

【Require Add-On Code】

99910525

**【Do Not Require Add-On Code】

EAN-13 Beginning with 978 Add-On Code Required

This setting programs the scanner to require an add-on code (2-digit or 5-digit) on EAN-13 barcodes that begin with “978”. The following settings can be programmed:

Require Add-On Code: All EAN-13 barcodes that begin with “978” must have a 2-digit or 5-digit add-on code. The EAN-13 barcode with the add-on code is then transmitted. If the required add-on code is not found, the EAN-13 barcode is discarded.

Do Not Require Add-On Code: If you have selected **Require Add-On Code**, and you want to disable this feature, scan **Do Not Require Add-On Code**. EAN-13 barcodes are handled, depending on your selection for the “2 or 5-Digit Add-On Code” feature.

99910520

【Require Add-On Code】

99910523

**【Do Not Require Add-On Code】

99900032

【Exit Setup】

99900031

**【Enter Setup】

EAN-13 Beginning with 979 Add-On Code Required

This setting programs the scanner to require an add-on code (2-digit or 5-digit) on EAN-13 barcodes that begin with “979”. The following settings can be programmed:

Require Add-On Code: All EAN-13 barcodes that begin with “979” must have a 2-digit or 5-digit add-on code. The EAN-13 barcode with the add-on code is then transmitted. If the required add-on code is not found, the EAN-13 barcode is discarded.

Do Not Require Add-On Code: If you have selected **Require Add-On Code**, and you want to disable this feature, scan **Do Not Require Add-On Code**. EAN-13 barcodes are handled, depending on your selection for the “2 or 5-Digit Add-On Code” feature.

99910526

【Require Add-On Code】

99910527

**【Do Not Require Add-On Code】

99900032

【Exit Setup】

99900031

**【Enter Setup】

ISSN

Restore Default Settings

Scan the barcode below to restore all parameters in ISSN configuration to the factory default settings. To find the related default settings, see the "**Default Parameters Table**" section in Chapter 7.

99910600

【Restore the Default Settings of ISSN】

Enable/Disable ISSN

ISSN is disabled by default.

99910602

【Enable ISSN】

99910601

**【Disable ISSN】

Note: If the scanner fails to identify ISSN barcodes, you may first try this solution by scanning the **Enter Setup** barcode and then **Enable ISSN** barcode.

99900032

【Exit Setup】

99900031

**【Enter Setup】

Set Code ID

Code ID can only consist of one or two English letters. See the "**Code ID Table**" section in Chapter 7 to find the default Code ID for ISSN.

To set the Code ID, scan the **Set Code ID for ISSN** barcode, the numeric barcodes corresponding to the hexadecimal value of a desired ID and the **Save** barcode.

【Set Code ID for ISSN】

Example: Set the Code ID of ISSN to "p" (its hexadecimal value is 0x70)

1. Scan the **Enter Setup** barcode.
2. Scan the **Set Code ID for ISSN** barcode.
3. Scan the numeric barcodes "7" and "0". (See the "**Digit Barcodes**" section in Chapter 7)
4. Scan the **Save** barcode. (See the "**Save/Cancel Barcodes**" section in Chapter 7)
5. Scan the **Exit Setup** barcode.

99900032

【Exit Setup】

99900031

**【Enter Setup】

ISBN

Restore Default Settings

Scan the barcode below to restore all parameters in ISBN configuration to the factory default settings. To find the related default settings, see the "**Default Parameters Table**" section in Chapter 7.

99910700

【Restore the Default Settings of ISBN】

Enable/Disable ISBN

ISBN is disabled by default.

99910702

【Enable ISBN】

99910701

**【Disable ISBN】

Note: If the scanner fails to identify ISBN barcodes, you may first try this solution by scanning the **Enter Setup** barcode and then **Enable ISBN** barcode.

99900031

**【Enter Setup】

Set ISBN Format

The default format is ISBN-13.

**【ISBN-13】

【ISBN-10】

Set Code ID

Code ID can only consist of one or two English letters. See the "**Code ID Table**" section in Chapter 7 to find the default Code ID for ISBN.

To set the Code ID, scan the **Set Code ID for ISBN** barcode, the numeric barcodes corresponding to the hexadecimal value of a desired ID and the **Save** barcode.

【Set Code ID for ISBN】

Example: Set the Code ID of ISBN to "p" (its hexadecimal value is 0x70)

1. Scan the **Enter Setup** barcode.
2. Scan the **Set Code ID for ISBN** barcode.
3. Scan the numeric barcodes "7" and "0". (See the "**Digit Barcodes**" section in Chapter 7)
4. Scan the **Save** barcode. (See the "**Save/Cancel Barcodes**" section in Chapter 7)
5. Scan the **Exit Setup** barcode.

99900031

**【Enter Setup】

UPC-E

Restore Default Settings

Scan the barcode below to restore all parameters in UPC-E configuration to the factory default settings. To find the related default settings, see the "**Default Parameters Table**" section in Chapter 7.

99911000

【Restore the Default Settings of UPC-E】

Enable/Disable UPC-E

UPC-E is enabled by default.

99911002

**【Enable UPC-E】

99911001

【Disable UPC-E】

Note: If the scanner fails to identify UPC-E barcodes, you may first try this solution by scanning the **Enter Setup** barcode and then **Enable UPC-E** barcode.

99900031

**【Enter Setup】

Transmit Check Digit

UPC-E is 8 digits in length with the last one as its check digit used to verify the integrity of the data. By default, the scanner transmits UPC-E check digit.

99911004

**【Transmit UPC-E Check Digit】

99911003

【Do Not Transmit UPC-E Check Digit】

Set Code ID

Code ID can only consist of one or two English letters. See the "**Code ID Table**" section in Chapter 7 to find the default Code ID for UPC-E.

To set the Code ID, scan the **Set Code ID for UPC-E** barcode, the numeric barcodes corresponding to the hexadecimal value of a desired ID and the **Save** barcode.

99911020

【Set Code ID for UPC-E】

Example: Set the Code ID of UPC-E to "p" (its hexadecimal value is 0x70)

1. Scan the **Enter Setup** barcode.
2. Scan the **Set Code ID for UPC-E** barcode.
3. Scan the numeric barcodes "7" and "0". (See the "**Digit Barcodes**" section in Chapter 7)
4. Scan the **Save** barcode. (See the "**Save/Cancel Barcodes**" section in Chapter 7)
5. Scan the **Exit Setup** barcode.

99900032

【Exit Setup】

99900031

**【Enter Setup】

2-Digit Add-On Code

A UPC-E barcode can be augmented with a two-digit add-on code to form a new one.

99911005

**【Disable 2-Digit Add-On Code】

99911006

【Enable 2-Digit Add-On Code】

99911007

【Decode UPC-E + 2-Digit Add-On Code Only】,

Note:

- ✧ **Disable 2-Digit Add-On Code:** The scanner decodes UPC-E and ignores the add-on code when presented with a UPC-E plus 2-digit add-on barcode. It can also decode UPC-E barcodes without 2-digit add-on codes.
- ✧ **Enable 2-Digit Add-On Code:** The scanner decodes a mix of UPC-E barcodes with and without 2-digit add-on codes.
- ✧ **Decode UPC-E + 2-Digit Add-On Code Only:** The scanner only decodes UPC-E barcodes that contain 2-digit add-on codes.

**【Enter Setup】

5-Digit Add-On Code

A UPC-E barcode can be augmented with a five-digit add-on code to form a new one.

**【Disable 5-Digit Add-On Code】

【Enable 5-Digit Add-On Code】

【Decode UPC-E + 5-Digit Add-On Code Only】

Note:

- ✧ **Disable 5-Digit Add-On Code:** The scanner decodes UPC-E and ignores the add-on code when presented with a UPC-E plus 5-digit add-on barcode. It can also decode UPC-E barcodes without 5-digit add-on codes.
- ✧ **Enable 5-Digit Add-On Code:** The scanner decodes a mix of UPC-E barcodes with and without 5-digit add-on codes.
- ✧ **Decode UPC-E + 5-Digit Add-On Code Only:** The scanner only decodes UPC-E barcodes that contain 5-digit add-on codes.

【Exit Setup】

99900031

**【Enter Setup】

Transmit System Character “0”

The first character of UPC-E barcode is the system character “0”. By default, the scanner does not transmit system character “0”.

99911013

**【Do Not Transmit System Character “0”】

99911014

【Transmit System Character “0”】

UPC-E Extension

- ✧ **Disable UPC-E Extend:** Transmit UPC-E barcodes as is.
- ✧ **Enable UPC-E Extend:** Extend UPC-E barcodes to make them compatible in length to UPC-A.
- ✧ **Convert UPC-E to UPC-A:** Extend UPC-E barcodes to make them compatible in format to UPC-A.

99911015

**【Disable UPC-E Extend】

99911016

【Enable UPC-E Extend】

99911017

【Convert UPC-E to UPC-A】

99900032

【Exit Setup】

99900031

**【Enter Setup】

UPC-A

Restore Default Settings

Scan the barcode below to restore all parameters in UPC-A configuration to the factory default settings. To find the related default settings, see the "**Default Parameters Table**" section in Chapter 7.

【Restore the Default Settings of UPC-A】

Enable/Disable UPC-A

UPC-A is enabled by default.

**【Enable UPC-A】

【Disable UPC-A】

Note: If the scanner fails to identify UPC-A barcodes, you may first try this solution by scanning the **Enter Setup** barcode and then **Enable UPC-A** barcode.

【Exit Setup】

99900031

**【Enter Setup】

Set Code ID

Code ID can only consist of one or two English letters. See the "**Code ID Table**" section in Chapter 7 to find the default Code ID for UPC-A.

To set the Code ID, scan the **Set Code ID for UPC-A** barcode, the numeric barcodes corresponding to the hexadecimal value of a desired ID and the **Save** barcode.

【Set Code ID for UPC-A】

Example: Set the Code ID of UPC-A to "p" (its hexadecimal value is 0x70)

1. Scan the **Enter Setup** barcode.
2. Scan the **Set Code ID for UPC-A** barcode.
3. Scan the numeric barcodes "7" and "0". (See the "**Digit Barcodes**" section in Chapter 7)
4. Scan the **Save** barcode. (See the "**Save/Cancel Barcodes**" section in Chapter 7)
5. Scan the **Exit Setup** barcode.

**【Enter Setup】

Transmit Check Digit

UPC-A is 13 digits in length with the last one as its check digit used to verify the integrity of the data. By default, the scanner transmits UPC-A check digit.

**【Transmit UPC-A Check Digit】

【Do Not Transmit UPC-A Check Digit】

Transmit Preamble Character

Preamble characters (Country Code and System Character) can be transmitted as part of a UPC-A barcode. Select one of the following options for transmitting UPC-A preamble to the host device: transmit system character only or transmit system character and country code (“0” for USA).

**【System Character】

【System Character & Country Code】

【Exit Setup】

99900031

**【Enter Setup】

2-Digit Add-On Code

A UPC-A barcode can be augmented with a two-digit add-on code to form a new one.

99911105

**【Disable 2-Digit Add-On Code】

99911106

【Enable 2-Digit Add-On Code】

99911107

【Decode UPC-A + 2-Digit Add-On Code Only】,

Note:

- ✧ **Disable 2-Digit Add-On Code:** The scanner decodes UPC-A and ignores the add-on code when presented with a UPC-A plus 2-digit add-on barcode. It can also decode UPC-A barcodes without 2-digit add-on codes.
- ✧ **Enable 2-Digit Add-On Code:** The scanner decodes a mix of UPC-A barcodes with and without 2-digit add-on codes.
- ✧ **Decode UPC-A + 2-Digit Add-On Code Only:** The scanner only decodes UPC-A barcodes that contain 2-digit add-on codes.

**【Enter Setup】

5-Digit Add-On Code

A UPC-A barcode can be augmented with a five-digit add-on code to form a new one.

**【Disable 5-Digit Add-On Code】

【Enable 5-Digit Add-On Code】

【Decode UPC-A + 5-Digit Add-On Code Only】

Note:

- ✧ **Disable 5-Digit Add-On Code:** The scanner decodes UPC-A and ignores the add-on code when presented with a UPC-A plus 5-digit add-on barcode. It can also decode UPC-A barcodes without 5-digit add-on codes.
- ✧ **Enable 5-Digit Add-On Code:** The scanner decodes a mix of UPC-A barcodes with and without 5-digit add-on codes.
- ✧ **Decode UPC-A + 5-Digit Add-On Code Only:** The scanner only decodes UPC-A barcodes that contain 5-digit add-on codes.

【Exit Setup】

99900031

**【Enter Setup】

Interleaved 2 of 5

Restore Default Settings

Scan the barcode below to restore all parameters in Interleaved 2 of 5 configuration to the factory default settings. To find the related default settings, see the "**Default Parameters Table"** section in Chapter 7.

99911200

【Restore the Default Settings of Interleaved 2 of 5】

Enable/Disable Interleaved 2 of 5

Interleaved 2 of 5 is enabled by default.

99911202

**【Enable Interleaved 2 of 5】

99911201

【Disable Interleaved 2 of 5】

Note: If the scanner fails to identify Interleaved 2 of 5 barcodes, you may first try this solution by scanning the **Enter Setup** barcode and then **Enable Interleaved 2 of 5** barcode.

99900032

【Exit Setup】

99900031

**【Enter Setup】

Set Code ID

Code ID can only consist of one or two English letters. See the "**Code ID Table**" section in Chapter 7 to find the default Code ID for Interleaved 2 of 5.

To set the Code ID, scan the **Set Code ID for Interleaved 2 of 5** barcode, the numeric barcodes corresponding to the hexadecimal value of a desired ID and the **Save** barcode.

99911210

【Set Code ID for Interleaved 2 of 5】

Example: Set the Code ID of Interleaved 2 of 5 to "p" (its hexadecimal value is 0x70)

1. Scan the **Enter Setup** barcode.
2. Scan the **Set Code ID for Interleaved 2 of 5** barcode.
3. Scan the numeric barcodes "7" and "0". (See the "**Digit Barcodes**" section in Chapter 7)
4. Scan the **Save** barcode. (See the "**Save/Cancel Barcodes**" section in Chapter 7)
5. Scan the **Exit Setup** barcode.

99900032

**【Enter Setup】

Check Digit Verification

A check digit is optional for Interleaved 2 of 5 and can be added as the last digit. It is a calculated value used to verify the integrity of the data. By default, the scanner does not transmit Interleaved 2 of 5 check digit after verification.

- ✧ **Disable:** The scanner transmits Interleaved 2 of 5 barcodes as is.
- ✧ **Do Not Transmit Check Digit After Verification:** The scanner checks the integrity of all Interleaved 2 of 5 barcodes to verify that the data complies with the check digit algorithm. Barcodes passing the check will be transmitted except the last digit, whereas those failing it will not be transmitted.
- ✧ **Transmit Check Digit After Verification:** The scanner checks the integrity of all Interleaved 2 of 5 barcodes to verify that the data complies with the check digit algorithm. Barcodes passing the check will be transmitted, whereas those failing it will not be transmitted.

【Disable】

**【Do Not Transmit Check Digit After Verification】

【Transmit Check Digit After Verification】

Note: If the **Do Not Transmit Check Digit After Verification** option is enabled, Interleaved 2 of 5 barcodes with a length that is less than the configured minimum length after having the check digit excluded will not be decoded. (For example, when the **Do Not Transmit Check Digit After Verification** option is enabled and the minimum length is set to 6, Interleaved 2 of 5 barcodes with a total length of 6 characters including the check digit cannot be read.)

【Exit Setup】

99900031

**【Enter Setup】

Set Length Range for Interleaved 2 of 5

The scanner can be configured to only decode Interleaved 2 of 5 barcodes with lengths that fall between (inclusive) the minimum and maximum lengths. To accomplish it, you need to set the minimum and maximum lengths.

If minimum length is set to be greater than maximum length, the scanner only decodes Interleaved 2 of 5 barcodes with either the minimum or maximum length. If minimum length is same as maximum length, only Interleaved 2 of 5 barcodes with that length are to be decoded.

99911206

【Set the Minimum Length】

99911207

【Set the Maximum Length】

Example: Set the scanner to decode Interleaved 2 of 5 barcodes containing between 8 and 12 characters

1. Scan the **Enter Setup** barcode.
2. Scan the **Set the Minimum Length** barcode.
3. Scan the numeric barcode “8”. (See the “**Digit Barcodes**” section in Chapter 7)
4. Scan the **Save** barcode. (See the “**Save/Cancel Barcodes**” section in Chapter 7)
5. Scan the **Set the Maximum Length** barcode.
6. Scan the numeric barcodes “1” and “2”.
7. Scan the **Save** barcode.
8. Scan the **Exit Setup** barcode.

99900032

99900031

**【Enter Setup】

Disable/Enable Febraban

99911211

**【Disable Febraban】

99911212

【Enable Febraban, Do Not Expand】

99911213

【Enable Febraban, Expand】

99900031

**【Enter Setup】

ITF-6

ITF-6 is a special kind of Interleaved 2 of 5 with a length of 6 characters and the last character as the check character. By default, ITF-6 is disabled.

ITF-6 priority principle: For the Interleaved 2 of 5 barcodes with a length of 6 characters and the last character as the check character, the ITF-6 configurations shall take precedence over the Interleaved 2 of 5 settings.

99911300

【Restore the Default Settings of ITF-6】

99911302

**【Disable ITF-6】

99911301

【Enable ITF-6 But Do Not Transmit Check Digit】

99911303

【Enable ITF-6 and Transmit Check Digit】

Note: An example of the ITF-6 priority principle: when ITF-6 is enabled and Interleaved 2 of 5 is disabled, the scanner only decodes Interleaved 2 of 5 barcodes with a length of 6 characters and the last character as the check character.

99900032

99900031

**【Enter Setup】

Set Code ID

Code ID can only consist of one or two English letters. See the "**Code ID Table**" section in Chapter 7 to find the default Code ID for ITF-6.

To set the Code ID, scan the **Set Code ID for ITF-6** barcode, the numeric barcodes corresponding to the hexadecimal value of a desired ID and the **Save** barcode.

【Set Code ID for ITF-6】

Example: Set the Code ID of ITF-6 to "p" (its hexadecimal value is 0x70)

1. Scan the **Enter Setup** barcode.
2. Scan the **Set Code ID for ITF-6** barcode.
3. Scan the numeric barcodes "7" and "0". (See the "**Digit Barcodes**" section in Chapter 7)
4. Scan the **Save** barcode. (See the "**Save/Cancel Barcodes**" section in Chapter 7)
5. Scan the **Exit Setup** barcode.

ITF-14

ITF-14 is a special kind of Interleaved 2 of 5 with a length of 14 characters and the last character as the check character. By default, ITF-14 is disabled.

ITF-14 priority principle: For the Interleaved 2 of 5 barcodes with a length of 14 characters and the last character as the check character, the ITF-14 configurations shall take precedence over the Interleaved 2 of 5 settings.

99911400

【Restore the Default Settings of ITF-14】

99911402

【Enable ITF-14 But Do Not Transmit Check Digit】

99911401

**【Disable ITF-14】

99911403

【Enable ITF-14 and Transmit Check Digit】

Note: An example of the ITF-14 priority principle: when ITF-14 is enabled and Interleaved 2 of 5 is disabled, the scanner only decodes Interleaved 2 of 5 barcodes with a length of 14 characters and the last character as the check character.

In the events that the ITF-14 configuration clashes with the Deutsche14 settings, the former shall prevail.

99900031

**【Enter Setup】

Set Code ID

Code ID can only consist of one or two English letters. See the "**Code ID Table**" section in Chapter 7 to find the default Code ID for ITF-14.

To set the Code ID, scan the **Set Code ID for ITF-14** barcode, the numeric barcodes for the hexadecimal value of a desired ID and the **Save** barcode.

99911404

【Set Code ID for ITF-14】

Example: Set the Code ID of ITF-14 to "p" (its hexadecimal value is 0x70)

1. Scan the **Enter Setup** barcode.
2. Scan the **Set Code ID for ITF-14** barcode.
3. Scan the numeric barcodes "7" and "0". (See the "**Digit Barcodes**" section in Chapter 7)
4. Scan the **Save** barcode. (See the "**Save/Cancel Barcodes**" section in Chapter 7)
5. Scan the **Exit Setup** barcode.

99900031

**【Enter Setup】

Deutsche 14

Restore Default Settings

Scan the barcode below to restore all parameters in Deutsche14 configuration to the factory default settings. To find the related default settings, see the "**Default Parameters Table**" section in Chapter 7.

99911500

【Restore the Default Settings of Deutsche14】

Enable/Disable Deutsche14

Deutsche14 is disabled by default.

99911502

【Enable Deutsche14 But Do Not Transmit Check Digit】

99911501

**【Disable Deutsche14】

99911503

【Enable Deutsche14 and Transmit Check Digit】

Note: It is advised not to enable Deutsche 14 unless necessary, because Deutsche 14, ITF-14 and Interleaved 2 of 5 use the same encoding method and enabling them at the same time can easily cause confusion with each other when decoding.

99900032

【Exit Setup】

99900031

**【Enter Setup】

Set Code ID

Code ID can only consist of one or two English letters. See the "**Code ID Table**" section in Chapter 7 to find the default Code ID for Deutsche14.

To set the Code ID, scan the **Set Code ID for Deutsche14** barcode, the numeric barcodes corresponding to the hexadecimal value of a desired ID and the **Save** barcode.

99911504

【Set Code ID for Deutsche14】

Example: Set the Code ID of Deutsche14 to "p" (its hexadecimal value is 0x70)

1. Scan the **Enter Setup** barcode.
2. Scan the **Set Code ID for Deutsche14** barcode.
3. Scan the numeric barcodes "7" and "0". (See the "**Digit Barcodes**" section in Chapter 7)
4. Scan the **Save** barcode. (See the "**Save/Cancel Barcodes**" section in Chapter 7)
5. Scan the **Exit Setup** barcode.

99900031

**【Enter Setup】

Deutsche 12

Restore Default Settings

Scan the barcode below to restore all parameters in Deutsche12 configuration to the factory default settings. To find the related default settings, see the "**Default Parameters Table**" section in Chapter 7.

99911600

【Restore the Default Settings of Deutsche12】

Enable/Disable Deutsche 12

Deutsche12 is disabled by default.

99911602

【Enable Deutsche12 But Do Not Transmit Check Digit】

99911601

**【Disable Deutsche12】

99911603

【Enable Deutsche12 and Transmit Check Digit】

Note: It is advised not to enable Deutsche 12 unless necessary, because Deutsche 12, ITF-12 and Interleaved 2 of 5 use the same encoding method and enabling them at the same time can easily cause confusion with each other when decoding.

99900032

【Exit Setup】

99900031

**【Enter Setup】

Set Code ID

Code ID can only consist of one or two English letters. See the "**Code ID Table**" section in Chapter 7 to find the default Code ID for Deutsche12.

To set the Code ID, scan the **Set Code ID for Deutsche 12** barcode, the numeric barcodes corresponding to the hexadecimal value of a desired ID and the **Save** barcode.

99911604

【Set Code ID for Deutsche12】

Example: Set the Code ID of Deutsche12 to "p" (its hexadecimal value is 0x70)

1. Scan the **Enter Setup** barcode.
2. Scan the **Set Code ID for Deutsche12** barcode.
3. Scan the numeric barcodes "7" and "0". (See the "**Digit Barcodes**" section in Chapter 7)
4. Scan the **Save** barcode. (See the "**Save/Cancel Barcodes**" section in Chapter 7)
5. Scan the **Exit Setup** barcode.

99900031

**【Enter Setup】

COOP 25 (Japanese Matrix 2 of 5)

Restore Default Settings

Scan the barcode below to restore all parameters in COOP 25 configuration to the factory default settings. To find the related default settings, see the "**Default Parameters Table**" section in Chapter 7.

【Restore the Default Settings of COOP25】

Enable/Disable COOP 25

COOP 25 is disabled by default.

【Enable COOP 25】

**【Disable COOP 25】

Note: If the scanner fails to identify COOP 25 barcodes, you may first try this solution by scanning the **Enter Setup** barcode and then **Enable COOP 25** barcode.

99900032

【Exit Setup】

99900031

**【Enter Setup】

Set Code ID

Code ID can only consist of one or two English letters. See the "**Code ID Table**" section in Chapter 7 to find the default Code ID for COOP 25.

To set the Code ID, scan the **Set Code ID for COOP 25** barcode, the numeric barcodes corresponding to the hexadecimal value of a desired ID and the **Save** barcode.

【Set Code ID for COOP 25】

Example: Set the Code ID of COOP 25 to "p" (its hexadecimal value is 0x70).

1. Scan the **Enter Setup** barcode.
2. Scan the **Set Code ID for COOP 25** barcode.
3. Scan the numeric barcodes "7" and "0". (See the "**Digit Barcodes**" section in Chapter 7)
4. Scan the **Save** barcode. (See the "**Save/Cancel Barcodes**" section in Chapter 7)
5. Scan the **Exit Setup** barcode.

**【Enter Setup】

Check Digit Verification

A check digit is optional for COOP 25 and can be added as the last digit. It is a calculated value used to verify the integrity of the data. By default, check digit verification is disabled.

- ✧ **Disable:** The scanner transmits COOP 25 barcodes as is.
- ✧ **Do Not Transmit Check Digit After Verification:** The scanner checks the integrity of all COOP 25 barcodes to verify that the data complies with the check digit algorithm. Barcodes passing the check will be transmitted except the last digit, whereas those failing it will not be transmitted.
- ✧ **Transmit Check Digit After Verification:** The scanner checks the integrity of all COOP 25 barcodes to verify that the data complies with the check digit algorithm. Barcodes passing the check will be transmitted, whereas those failing it will not be transmitted.

**【Disable】

【Transmit Check Digit After Verification】

【Do Not Transmit Check Digit After Verification】

Note: If the **Do Not Transmit Check Digit After Verification** option is enabled, COOP 25 barcodes with a length that is less than the configured minimum length after having the check digit excluded will not be decoded. (For example, when the **Do Not Transmit Check Digit After Verification** option is enabled and the minimum length is set to 4, COOP 25 barcodes with a total length of 4 characters including the check digit cannot be read.)

【Exit Setup】

99900031

**【Enter Setup】

Set Length Range for COOP 25

The scanner can be configured to only decode COOP 25 barcodes with lengths that fall between (inclusive) the minimum and maximum lengths. To accomplish it, you need to set the minimum and maximum lengths.

If minimum length is set to be greater than maximum length, the scanner only decodes COOP 25 barcodes with either the minimum or maximum length. If minimum length is same as maximum length, only COOP 25 barcodes with that length are to be decoded.

99911706

【Set the Minimum Length】

99911707

【Set the Maximum Length】

Example: Set the scanner to decode COOP 25 barcodes containing between 8 and 12 characters

1. Scan the **Enter Setup** barcode.
2. Scan the **Set the Minimum Length** barcode.
3. Scan the numeric barcode “8”. (See the “**Digit Barcodes**” section in Chapter 7)
4. Scan the **Save** barcode. (See the “**Save/Cancel Barcodes**” section in Chapter 7)
5. Scan the **Set the Maximum Length** barcode.
6. Scan the numeric barcodes “1” and “2”.
7. Scan the **Save** barcode.
8. Scan the **Exit Setup** barcode.

99900031

**【Enter Setup】

Matrix 2 of 5 (European Matrix 2 of 5)

Restore Default Settings

Scan the barcode below to restore all parameters in Matrix 2 of 5 configuration to the factory default settings. To find the related default settings, see the "**Default Parameters Table"** section in Chapter 7.

99912000

【Restore the Default Settings of Matrix 2 of 5】

Enable/Disable Matrix 2 of 5

Matrix 2 of 5 is enabled by default.

99912002

**【Enable Matrix 2 of 5】

99912001

【Disable Matrix 2 of 5】

Note: If the scanner fails to identify Matrix 2 of 5 barcodes, you may first try this solution by scanning the **Enter Setup** barcode and then **Enable Matrix 2 of 5** barcode.

99900032

【Exit Setup】

99900031

**【Enter Setup】

Set Code ID

Code ID can only consist of one or two English letters. See the "**Code ID Table**" section in Chapter 7 to find the default Code ID for Matrix 2 of 5.

To set the Code ID, scan the **Set Code ID for Matrix 2 of 5** barcode, the numeric barcodes corresponding to the hexadecimal value of a desired ID and the **Save** barcode.

【Set Code ID for Matrix 2 of 5】

Example: Set the Code ID of Matrix 2 of 5 to "p" (its hexadecimal value is 0x70)

1. Scan the **Enter Setup** barcode.
2. Scan the **Set Code ID for Matrix 2 of 5** barcode.
3. Scan the numeric barcodes "7" and "0". (See the "**Digit Barcodes**" section in Chapter 7)
4. Scan the **Save** barcode. (See the "**Save/Cancel Barcodes**" section in Chapter 7)
5. Scan the **Exit Setup** barcode.

**【Enter Setup】

Check Digit Verification

A check digit is optional for Matrix 2 of 5 and can be added as the last digit. It is a calculated value used to verify the integrity of the data. By default, check digit verification is disabled.

- ✧ **Disable:** The scanner transmits Matrix 2 of 5 barcodes as is.
- ✧ **Do Not Transmit Check Digit After Verification:** The scanner checks the integrity of all Matrix 2 of 5 barcodes to verify that the data complies with the check digit algorithm. Barcodes passing the check will be transmitted except the last digit, whereas those failing it will not be transmitted.
- ✧ **Transmit Check Digit After Verification:** The scanner checks the integrity of all Matrix 2 of 5 barcodes to verify that the data complies with the check digit algorithm. Barcodes passing the check will be transmitted, whereas those failing it will not be transmitted.

**【Disable】

【Transmit Check Digit After Verification】

【Do Not Transmit Check Digit After Verification】

Note: If the **Do Not Transmit Check Digit After Verification** option is enabled, Matrix 2 of 5 barcodes with a length that is less than the configured minimum length after having the check digit excluded will not be decoded. (For example, when the **Do Not Transmit Check Digit After Verification** option is enabled and the minimum length is set to 4, Matrix 2 of 5 barcodes with a total length of 4 characters including the check digit cannot be read.)

【Exit Setup】

99900031

**【Enter Setup】

Set Length Range for Matrix 2 of 5

The scanner can be configured to only decode Matrix 2 of 5 barcodes with lengths that fall between (inclusive) the minimum and maximum lengths. To accomplish it, you need to set the minimum and maximum lengths.

If minimum length is set to be greater than maximum length, the scanner only decodes Matrix 2 of 5 barcodes with either the minimum or maximum length. If minimum length is same as maximum length, only Matrix 2 of 5 barcodes with that length are to be decoded.

99912006

【Set the Minimum Length】

99912007

【Set the Maximum Length】

Example: Set the scanner to decode Matrix 2 of 5 barcodes containing between 8 and 12 characters

1. Scan the **Enter Setup** barcode.
2. Scan the **Set the Minimum Length** barcode.
3. Scan the numeric barcode “8”. (See the “**Digit Barcodes**” section in Chapter 7)
4. Scan the **Save** barcode. (See the “**Save/Cancel Barcodes**” section in Chapter 7)
5. Scan the **Set the Maximum Length** barcode.
6. Scan the numeric barcodes “1” and “2”.
7. Scan the **Save** barcode.
8. Scan the **Exit Setup** barcode.

99900031

**【Enter Setup】

Industrial 25

Restore Default Settings

Scan the barcode below to restore all parameters in Industrial 25 configuration to the factory default settings. To find the related default settings, see the "**Default Parameters Table**" section in Chapter 7.

99912100

【Restore the Default Settings of Industrial 25】

Enable/Disable Industrial 25

Industrial 25 is enabled by default.

99912102

**【Enable Industrial 25】

99912101

【Disable Industrial 25】

Note: If the scanner fails to identify Industrial 25 barcodes, you may first try this solution by scanning the **Enter Setup** barcode and then **Enable Industrial 25** barcode.

99900032

【Exit Setup】

99900031

**【Enter Setup】

Set Code ID

Code ID can only consist of one or two English letters. See the "**Code ID Table**" section in Chapter 7 to find the default Code ID for Industrial 25.

To set the Code ID, scan the **Set Code ID for Industrial 25** barcode, the numeric barcodes corresponding to the hexadecimal value of a desired ID and the **Save** barcode.

【Set Code ID for Industrial 25】

Example: Set the Code ID of Industrial 25 to "p" (its hexadecimal value is 0x70)

1. Scan the **Enter Setup** barcode.
2. Scan the **Set Code ID for Industrial 25** barcode.
3. Scan the numeric barcodes "7" and "0". (See the "**Digit Barcodes**" section in Chapter 7)
4. Scan the **Save** barcode. (See the "**Save/Cancel Barcodes**" section in Chapter 7)
5. Scan the **Exit Setup** barcode.

99900031

**【Enter Setup】

Check Digit Verification

A check digit is optional for Industrial 25 and can be added as the last digit. It is a calculated value used to verify the integrity of the data. By default, the scanner transmits check digit after verification.

- ✧ **Disable:** The scanner transmits Industrial 25 barcodes as is.
- ✧ **Do Not Transmit Check Digit After Verification:** The scanner checks the integrity of all Industrial 25 barcodes to verify that the data complies with the check digit algorithm. Barcodes passing the check will be transmitted except the last digit, whereas those failing it will not be transmitted.
- ✧ **Transmit Check Digit After Verification:** The scanner checks the integrity of all Industrial 25 barcodes to verify that the data complies with the check digit algorithm. Barcodes passing the check will be transmitted, whereas those failing it will not be transmitted.

99912103

【Disable】

99912104

**【Transmit Check Digit After Verification】

99912105

【Do Not Transmit Check Digit After Verification】

Note: If the **Do Not Transmit Check Digit After Verification** option is enabled, Industrial 25 barcodes with a length that is less than the configured minimum length after having the check digit excluded will not be decoded. (For example, when the **Do Not Transmit Check Digit After Verification** option is enabled and the minimum length is set to 4, Industrial 25 barcodes with a total length of 4 characters including the check digit cannot be read.)

99900032

99900031

**【Enter Setup】

Set Length Range for Industrial 25

The scanner can be configured to only decode Industrial 25 barcodes with lengths that fall between (inclusive) the minimum and maximum lengths. To accomplish it, you need to set the minimum and maximum lengths.

If minimum length is set to be greater than maximum length, the scanner only decodes Industrial 25 barcodes with either the minimum or maximum length. If minimum length is same as maximum length, only Industrial 25 barcodes with that length are to be decoded.

99912006

【Set the Minimum Length】

99912007

【Set the Maximum Length】

Example: Set the scanner to decode Industrial 25 barcodes containing between 8 and 12 characters

1. Scan the **Enter Setup** barcode.
2. Scan the **Set the Minimum Length** barcode.
3. Scan the numeric barcode “8”. (See the “**Digit Barcodes**” section in Chapter 7)
4. Scan the **Save** barcode. (See the “**Save/Cancel Barcodes**” section in Chapter 7)
5. Scan the **Set the Maximum Length** barcode.
6. Scan the numeric barcodes “1” and “2”.
7. Scan the **Save** barcode.
8. Scan the **Exit Setup** barcode.

99900031

**【Enter Setup】

Standard 25

Restore Default Settings

Scan the barcode below to restore all parameters in Standard 25 configuration to the factory default settings. To find the related default settings, see the "**Default Parameters Table**" section in Chapter 7.

【Restore the Default Settings of Standard 25】

Enable/Disable Standard 25

Standard 25 is enabled by default.

**【Enable Standard 25】

【Disable Standard 25】

Note: If the scanner fails to identify Standard 25 barcodes, you may first try this solution by scanning the **Enter Setup** barcode and then **Enable Standard 25** barcode.

99900032

【Exit Setup】

99900031

**【Enter Setup】

Set Code ID

Code ID can only consist of one or two English letters. See the "**Code ID Table**" section in Chapter 7 to find the default Code ID for Standard 25.

To set the Code ID, scan the **Set Code ID for Standard 25** barcode, the numeric barcodes corresponding to the hexadecimal value of a desired ID and the **Save** barcode.

【Set Code ID for Standard 25】

Example: Set the Code ID of Standard 25 to "p" (its hexadecimal value is 0x70)

1. Scan the **Enter Setup** barcode.
2. Scan the **Set Code ID for Standard 25** barcode.
3. Scan the numeric barcodes "7" and "0". (See the "**Digit Barcodes**" section in Chapter 7)
4. Scan the **Save** barcode. (See the "**Save/Cancel Barcodes**" section in Chapter 7)
5. Scan the **Exit Setup** barcode.

**【Enter Setup】

Check Digit Verification

A check digit is optional for Standard 25 and can be added as the last digit. It is a calculated value used to verify the integrity of the data. By default, check digit verification is disabled.

- ✧ **Disable:** The scanner transmits Standard 25 barcodes as is.
- ✧ **Do Not Transmit Check Digit After Verification:** The scanner checks the integrity of all Standard 25 barcodes to verify that the data complies with the check digit algorithm. Barcodes passing the check will be transmitted except the last digit, whereas those failing it will not be transmitted.
- ✧ **Transmit Check Digit After Verification:** The scanner checks the integrity of all Standard 25 barcodes to verify that the data complies with the check digit algorithm. Barcodes passing the check will be transmitted, whereas those failing it will not be transmitted.

**【Disable】

【Transmit Check Digit After Verification】

【Do Not Transmit Check Digit After Verification】

Note: If the **Do Not Transmit Check Digit After Verification** option is enabled, Standard 25 barcodes with a length that is less than the configured minimum length after having the check digit excluded will not be decoded. (For example, when the **Do Not Transmit Check Digit After Verification** option is enabled and the minimum length is set to 4, Standard 25 barcodes with a total length of 4 characters including the check digit cannot be read.)

【Exit Setup】

99900031

**【Enter Setup】

Set Length Range for Standard 25

The scanner can be configured to only decode Standard 25 barcodes with lengths that fall between (inclusive) the minimum and maximum lengths. To accomplish it, you need to set the minimum and maximum lengths.

If minimum length is set to be greater than maximum length, the scanner only decodes Standard 25 barcodes with either the minimum or maximum length. If minimum length is same as maximum length, only Standard 25 barcodes with that length are to be decoded.

99912206

【Set the Minimum Length】

99912207

【Set the Maximum Length】

Example: Set the scanner to decode Standard 25 barcodes containing between 8 and 12 characters

1. Scan the **Enter Setup** barcode.
2. Scan the **Set the Minimum Length** barcode.
3. Scan the numeric barcode “8”. (See the “**Digit Barcodes**” section in Chapter 7)
4. Scan the **Save** barcode. (See the “**Save/Cancel Barcodes**” section in Chapter 7)
5. Scan the **Set the Maximum Length** barcode.
6. Scan the numeric barcodes “1” and “2”.
7. Scan the **Save** barcode.
8. Scan the **Exit Setup** barcode.

99900032

【Exit Setup】

**【Enter Setup】

Code 39

Restore Default Settings

Scan the barcode below to restore all parameters in Code 39 configuration to the factory default settings. To find the related default settings, see the "**Default Parameters Table**" section in Chapter 7.

【Restore the Default Settings of Code 39】

Enable/Disable Code 39

Code 39 is enabled by default.

**【Enable Code 39】

【Disable Code 39】

Note: If the scanner fails to identify Code 39 barcodes, you may first try this solution by scanning the **Enter Setup** barcode and then **Enable Code 39** barcode.

【Exit Setup】

99900031

**【Enter Setup】

Set Code ID

Code ID can only consist of one or two English letters. See the "**Code ID Table**" section in Chapter 7 to find the default Code ID for Code 39.

To set the Code ID, scan the **Set Code ID for Code 39** barcode, the numeric barcodes corresponding to the hexadecimal value of a desired ID and the **Save** barcode.

99912414

【Set Code ID for Code 39】

Example: Set the Code ID of Code 39 to "p" (its hexadecimal value is 0x70)

1. Scan the **Enter Setup** barcode.
2. Scan the **Set Code ID for Code 39** barcode.
3. Scan the numeric barcodes "7" and "0". (See the "**Digit Barcodes**" section in Chapter 7)
4. Scan the **Save** barcode. (See the "**Save/Cancel Barcodes**" section in Chapter 7)
5. Scan the **Exit Setup** barcode.

99900032

【Exit Setup】

**【Enter Setup】

Check Digit Verification

A check digit is optional for Code 39 and can be added as the last digit. It is a calculated value used to verify the integrity of the data. By default, check digit verification is disabled.

- ✧ **Disable:** The scanner transmits Code 39 barcodes as is.
- ✧ **Do Not Transmit Check Digit After Verification:** The scanner checks the integrity of all Code 39 barcodes to verify that the data complies with the check digit algorithm. Barcodes passing the check will be transmitted except the last digit, whereas those failing it will not be transmitted.
- ✧ **Transmit Check Digit After Verification:** The scanner checks the integrity of all Code 39 barcodes to verify that the data complies with the check digit algorithm. Barcodes passing the check will be transmitted, whereas those failing it will not be transmitted.

**【Disable】

【Transmit Check Digit After Verification】

【Do Not Transmit Check Digit After Verification】

Note: If the **Do Not Transmit Check Digit After Verification** option is enabled, Code 39 barcodes with a length that is less than the configured minimum length after having the check digit excluded will not be decoded. (For example, when the **Do Not Transmit Check Digit After Verification** option is enabled and the minimum length is set to 4, Code 39 barcodes with a total length of 4 characters including the check digit cannot be read.)

【Exit Setup】

99900031

**【Enter Setup】

Transmit Start/Stop Character

Code 39 uses an asterisk (*) for both the start and the stop characters. You can choose whether or not to transmit the start/stop characters by scanning the appropriate barcode below. By default, the scanner transmits the start/stop characters.

99912407

**【Transmit Start/Stop Character】

99912406

【Do not Transmit Start/Stop Character】

Enable/Disable Code 39 Full ASCII

You can configure your scanner to identify all ASCII characters by scanning the appropriate barcode below. By default, the scanner is able to read all ASCII characters.

99912410

【Disable Code 39 Full ASCII】

99912411

**【Enable Code 39 Full ASCII】

99900032

【Exit Setup】

**【Enter Setup】

Set Length Range for Code 39

The scanner can be configured to only decode Code 39 barcodes with lengths that fall between (inclusive) the minimum and maximum lengths. To accomplish it, you need to set the minimum and maximum lengths.

If minimum length is set to be greater than maximum length, the scanner only decodes Code 39 barcodes with either the minimum or maximum length. If minimum length is same as maximum length, only Code 39 barcodes with that length are to be decoded.

【Set the Minimum Length】

【Set the Maximum Length】

Example: Set the scanner to decode Code 39 barcodes containing between 8 and 12 characters.

1. Scan the **Enter Setup** barcode.
2. Scan the **Set the Minimum Length** barcode.
3. Scan the numeric barcode “8”. (See the “**Digit Barcodes**” section in Chapter 7)
4. Scan the **Save** barcode. (See the “**Save/Cancel Barcodes**” section in Chapter 7)
5. Scan the **Set the Maximum Length** barcode.
6. Scan the numeric barcode “1”.
7. Scan the numeric barcode “2”.
8. Scan the **Save** barcode.
9. Scan the **Exit Setup** barcode.

【Exit Setup】

**【Enter Setup】

Enable Code 32

Code 32 is a variant of Code 39 used by the Italian pharmaceutical industry. Scan the appropriate bar code below to enable or disable Code 32. Code 39 must be enabled and Code 39 check digit verification must be disabled for this parameter to function.

**【Disable Code 32】

【Enable Code 32】

Code 32 Prefix

Scan the appropriate bar code below to enable or disable adding the prefix character “A” to all Code 32 barcodes. Code 32 must be enabled for this parameter to function.

**【Disable Code 32 Prefix】

【Enable Code 32 Prefix】

【Exit Setup】

99900031

**【Enter Setup】

Transmit Code 32 Check Digit

Code 32 must be enabled for this parameter to function.

99912422

**【Do Not Transmit Code 32 Check Digit】

99912421

【Transmit Code 32 Check Digit】

Transmit Code 32 Start/Stop Character

Code 32 must be enabled for this parameter to function.

99912424

**【Do Not Transmit Code 32 Start/Stop Character】

99912423

【Transmit Code 32 Start/Stop Character】

99900032

【Exit Setup】

99900031

**【Enter Setup】

Codabar

Restore Default Settings

Scan the barcode below to restore all parameters in Codabar configuration to the factory default settings. To find the related default settings, see the "**Default Parameters Table**" section in Chapter 7.

99912500

【Restore the Default Settings of Codabar】

Enable/Disable Codabar

Codabar is enabled by default.

99912502

**【Enable Codabar】

99912501

【Disable Codabar】

Note: If the scanner fails to identify Codabar barcodes, you may first try this solution by scanning the **Enter Setup** barcode and then **Enable Codabar** barcode.

**【Enter Setup】

Set Code ID

Code ID can only consist of one or two English letters. See the "**Code ID Table**" section in Chapter 7 to find the default Code ID for Codabar.

To set the Code ID, scan the **Set Code ID for Codabar** barcode, the numeric barcodes corresponding to the hexadecimal value of a desired ID and the **Save** barcode.

【Set Code ID for Codabar】

Example: Set the Code ID of Codabar to "p" (its hexadecimal value is 0x70)

1. Scan the **Enter Setup** barcode.
2. Scan the **Set Code ID for Codabar** barcode.
3. Scan the numeric barcodes "7" and "0". (See the "**Digit Barcodes**" section in Chapter 7)
4. Scan the **Save** barcode. (See the "**Save/Cancel Barcodes**" section in Chapter 7)
5. Scan the **Exit Setup** barcode.

【Exit Setup】

99900031

**【Enter Setup】

Check Digit Verification

A check digit is optional for Codabar and can be added as the last digit. It is a calculated value used to verify the integrity of the data. By default, check digit verification is disabled.

- ✧ **Disable:** The scanner transmits Codabar barcodes as is.
- ✧ **Do Not Transmit Check Digit After Verification:** The scanner checks the integrity of all Codabar barcodes to verify that the data complies with the check digit algorithm. Barcodes passing the check will be transmitted except the last digit, whereas those failing it will not be transmitted.
- ✧ **Transmit Check Digit After Verification:** The scanner checks the integrity of all Codabar barcodes to verify that the data complies with the check digit algorithm. Barcodes passing the check will be transmitted, whereas those failing it will not be transmitted.

99912503

**【Disable】

99912504

【Transmit Check Digit After Verification】

99912505

【Do Not Transmit Check Digit After Verification】

Note: If the **Do Not Transmit Check Digit After Verification** option is enabled, Codabar barcodes with a length that is less than the configured minimum length after having the check digit excluded will not be decoded. (For example, when the **Do Not Transmit Check Digit After Verification** option is enabled and the minimum length is set to 4, Codabar barcodes with a total length of 4 characters including the check digit cannot be read.)

99900032

【Exit Setup】

99900031

**【Enter Setup】

Start/Stop Character

By default, the scanner transmits start/stop characters which are in the form of “ABCD/ABCD”.

99912506

【Do not Transmit Start/Stop Character】

99912507

**【Transmit Start/Stop Character】

99912510

**【ABCD/ABCD As the Start/Stop Character】

99912511

【ABCD/TN*E As the Start/Stop Character】

99912512

【abcd/abcd As the Start/Stop Character】

99912513

【abcd/tn*e As the Start/Stop Character】

99900032

【Exit Setup】

99900031

**【Enter Setup】

Set Length Range for Codabar

The scanner can be configured to only decode Codabar barcodes with lengths that fall between (inclusive) the minimum and maximum lengths. To accomplish it, you need to set the minimum and maximum lengths.

If minimum length is set to be greater than maximum length, the scanner only decodes Codabar barcodes with either the minimum or maximum length. If minimum length is same as maximum length, only Codabar barcodes with that length are to be decoded.

99912514

【Set the Minimum Length】

99912515

【Set the Maximum Length】

Example: Set the scanner to decode Codabar barcodes containing between 8 and 12 characters.

1. Scan the **Enter Setup** barcode.
2. Scan the **Set the Minimum Length** barcode.
3. Scan the numeric barcode “8”. (See the “**Digit Barcodes**” section in Chapter 7)
4. Scan the **Save** barcode. (See the “**Save/Cancel Barcodes**” section in Chapter 7)
5. Scan the **Set the Maximum Length** barcode.
6. Scan the numeric barcode “1”.
7. Scan the numeric barcode “2”.
8. Scan the **Save** barcode.
9. Scan the **Exit Setup** barcode.

99900031

**【Enter Setup】

Code 93

Restore Default Settings

Scan the barcode below to restore all parameters in Code 93 configuration to the factory default settings. To find the related default settings, see the "**Default Parameters Table**" section in Chapter 7.

99912600

【Restore the Default Settings of Code 93】

Enable/Disable Code 93

Code 93 is enabled by default.

99912602

**【Enable Code 93】

99912601

【Disable Code 93】

Note: If the scanner fails to identify Code 93 barcodes, you may first try this solution by scanning the **Enter Setup** barcode and then **Enable Code 93** barcode.

99900032

99900031

**【Enter Setup】

Set Code ID

Code ID can only consist of one or two English letters. See the "**Code ID Table**" section in Chapter 7 to find the default Code ID for Code 93.

To set the Code ID, scan the **Set Code ID for Code 93** barcode, the numeric barcodes corresponding to the hexadecimal value of a desired ID and the **Save** barcode.

99912610

【Set Code ID for Code 93】

Example: Set the Code ID of Code 93 to "p" (its hexadecimal value is 0x70)

1. Scan the **Enter Setup** barcode.
2. Scan the **Set Code ID for Code 93** barcode.
3. Scan the numeric barcodes "7" and "0". (See the "**Digit Barcodes**" section in Chapter 7)
4. Scan the **Save** barcode. (See the "**Save/Cancel Barcodes**" section in Chapter 7)
5. Scan the **Exit Setup** barcode.

99900032

**【Enter Setup】

Check Digit Verification

Check digits are optional for Code 93 and can be added as the last two digits, which are calculated values used to verify the integrity of the data. By default, the scanner does not transmit check digits after verification.

- ✧ **Disable:** The scanner transmits Code 93 barcodes as is.
- ✧ **Do Not Transmit Check Digit After Verification:** The scanner checks the integrity of all Code 93 barcodes to verify that the data complies with the check digit algorithm. Barcodes passing the checks will be transmitted except the last two digits, whereas those failing them will not be transmitted.
- ✧ **Transmit Check Digit After Verification:** The scanner checks the integrity of all Code 93 barcodes to verify that the data complies with the check digit algorithm. Barcodes passing the checks will be transmitted, whereas those failing them will not be transmitted.

【Disable】

【Transmit Check Digit After Verification】

**【Do Not Transmit Check Digit After Verification】

Note: If the **Do Not Transmit Check Digit After Verification** option is enabled, Code 93 barcodes with a length that is less than the configured minimum length after having the two check digits excluded will not be decoded. (For example, when the **Do Not Transmit Check Digits After Verification** option is enabled and the minimum length is set to 4, Code 93 barcodes with a total length of 4 characters including the two check digits cannot be read.)

【Exit Setup】

99900031

**【Enter Setup】

Set Length Range for Code 93

The scanner can be configured to only decode Code 93 barcodes with lengths that fall between (inclusive) the minimum and maximum lengths. To accomplish it, you need to set the minimum and maximum lengths.

If minimum length is set to be greater than maximum length, the scanner only decodes Code 93 barcodes with either the minimum or maximum length. If minimum length is same as maximum length, only Code 93 barcodes with that length are to be decoded.

99912606

【Set the Minimum Length】

99912607

【Set the Maximum Length】

Example: Set the scanner to decode Code 93 barcodes containing between 8 and 12 characters.

1. Scan the **Enter Setup** barcode.
2. Scan the **Set the Minimum Length** barcode.
3. Scan the numeric barcode “8”. (See the “**Digit Barcodes**” section in Chapter 7)
4. Scan the **Save** barcode. (See the “**Save/Cancel Barcodes**” section in Chapter 7)
5. Scan the **Set the Maximum Length** barcode.
6. Scan the numeric barcode “1”.
7. Scan the numeric barcode “2”.
8. Scan the **Save** barcode.
9. Scan the **Exit Setup** barcode.

99900031

**【Enter Setup】

Code 11

Restore Default Settings

Scan the barcode below to restore all parameters in Code 11 configuration to the factory default settings. To find the related default settings, see the "**Default Parameters Table**" section in Chapter 7.

99912700

【Restore the Default Settings of Code 11】

Enable/Disable Code 11

Code 11 is disabled by default.

99912702

【Enable Code 11】

99912701

**【Disable Code 11】

Note: If the scanner fails to identify Code 11 barcodes, you may first try this solution by scanning the **Enter Setup** barcode and then **Enable Code 11** barcode.

99900032

【Exit Setup】

99900031

**【Enter Setup】

Set Code ID

Code ID can only consist of one or two English letters. See the "**Code ID Table**" section in Chapter 7 to find the default Code ID for Code 11.

To set the Code ID, scan the **Set Code ID for Code 11** barcode, the numeric barcodes corresponding to the hexadecimal value of a desired ID and the **Save** barcode.

【Set Code ID for Code 11】

Example: Set the Code ID of Code 11 to "p" (its hexadecimal value is 0x70)

1. Scan the **Enter Setup** barcode.
2. Scan the **Set Code ID for Code 11** barcode.
3. Scan the numeric barcodes "7" and "0". (See the "**Digit Barcodes**" section in Chapter 7)
4. Scan the **Save** barcode. (See the "**Save/Cancel Barcodes**" section in Chapter 7)
5. Scan the **Exit Setup** barcode.

99900031

**【Enter Setup】

Check Digit Verification

Check digits are optional for Code 11 and can be added as the last one or two digits, which are calculated values used to verify the integrity of the data. By default, the scanner does not transmit check digit after verification (One Check Digit, MOD11).

If the **Disable** option is enabled, the scanner transmits Code 11 barcodes as is.

99912703

【Disable】

99912704

**【One Check Digit, MOD11】

99912705

【Two Check Digits, MOD11/MOD11】

99912706

【Two Check Digits, MOD11/MOD9】

99912707

【One Check Digit, MOD11 （Len<=10）】
【Two Check Digits, MOD11/MOD11（Len>10）】

99912710

【One Check Digit, MOD11 （Len<=10）】
【Two Check Digits, MOD11/MOD9 （Len>10）】

99912711

**【Do Not Transmit Check Digit】

99912712

【Transmit Check Digit】

Note: If you select a check digit algorithm and the **Do Not Transmit Check Digit** option, Code 11 barcodes with a length that is less than the configured minimum length after having the check digit(s) excluded will not be decoded. (For example, when the **One Check Digit, MOD11** and **Do Not Transmit Check Digit** options are enabled and the minimum length is set to 4, Code 11 barcodes with a total length of 4 characters including the check digit cannot be read.)

99900032

【Exit Setup】

**【Enter Setup】

Set Length Range for Code 11

The scanner can be configured to only decode Code 11 barcodes with lengths that fall between (inclusive) the minimum and maximum lengths. To accomplish it, you need to set the minimum and maximum lengths.

If minimum length is set to be greater than maximum length, the scanner only decodes Code 11 barcodes with either the minimum or maximum length. If minimum length is same as maximum length, only Code 11 barcodes with that length are to be decoded.

【Set the Minimum Length】

【Set the Maximum Length】

Example: Set the scanner to decode Code11 barcodes containing between 8 and 12 characters.

1. Scan the **Enter Setup** barcode.
2. Scan the **Set the Minimum Length** barcode.
3. Scan the numeric barcode “8”. (See the “**Digit Barcodes**” section in Chapter 7)
4. Scan the **Save** barcode. (See the “**Save/Cancel Barcodes**” section in Chapter 7)
5. Scan the **Set the Maximum Length** barcode.
6. Scan the numeric barcode “1”.
7. Scan the numeric barcode “2”.
8. Scan the **Save** barcode.
9. Scan the **Exit Setup** barcode.

【Exit Setup】

99900031

**【Enter Setup】

Plessey

Restore Default Settings

Scan the barcode below to restore all parameters in Plessey configuration to the factory default settings. To find the related default settings, see the "**Default Parameters Table**" section in Chapter 7.

【Restore the Default Settings of Plessey】

Enable/Disable Plessey

Plessey is disabled by default.

【Enable Plessey】

**【Disable Plessey】

Note: If the scanner fails to identify Plessey barcodes, you may first try this solution by scanning the **Enter Setup** barcode and then **Enable Plessey** barcode.

99900032

【Exit Setup】

99900031

**【Enter Setup】

Set Code ID

Code ID can only consist of one or two English letters. See the "**Code ID Table**" section in Chapter 7 to find the default Code ID for Plessey.

To set the Code ID, scan the **Set Code ID for Plessey** barcode, the numeric barcodes corresponding to the hexadecimal value of a desired ID and the **Save** barcode.

【Set Code ID for Plessey】

Example: Set the Code ID of Plessey to "p" (its hexadecimal value is 0x70)

1. Scan the **Enter Setup** barcode.
2. Scan the **Set Code ID for Plessey** barcode.
3. Scan the programming barcodes for "7" and "0". (See the "**Digit Barcodes**" section in Chapter 7)
4. Scan the **Save** barcode. (See the "**Save/Cancel Barcodes**" section in Chapter 7)
5. Scan the **Exit Setup** barcode.

99900031

**【Enter Setup】

Check Digit Verification

Check digits are optional for Plessey and can be added as the last two digits, which are calculated values used to verify the integrity of the data. By default, the scanner does not transmit check digits after verification.

- ✧ **Disable:** The scanner transmits Plessey barcodes as is.
- ✧ **Do Not Transmit Check Digit After Verification:** The scanner checks the integrity of all Plessey barcodes to verify that the data complies with the check digit algorithm. Barcodes passing the checks will be transmitted except the last two digits, whereas those failing them will not be transmitted.
- ✧ **Transmit Check Digit After Verification:** The scanner checks the integrity of all Plessey barcodes to verify that the data complies with the check digit algorithm. Barcodes passing the checks will be transmitted, whereas those failing them will not be transmitted.

99913003

【Disable】

99913004

【Transmit Check Digit After Verification】

99913005

**【Do Not Transmit Check Digit After Verification】

Note: If the **Do Not Transmit Check Digit After Verification** option is enabled, Plessey barcodes with a length that is less than the configured minimum length after having the check digits excluded will not be decoded. (For example, when the **Do Not Transmit Check Digit After Verification** option is enabled and the minimum length is set to 4, Plessey barcodes with a total length of 4 characters including the check digits cannot be read.)

99900032

【Exit Setup】

99900031

**【Enter Setup】

Set Length Range for Plessey

The scanner can be configured to only decode Plessey barcodes with lengths that fall between (inclusive) the minimum and maximum lengths. To accomplish it, you need to set the minimum and maximum lengths.

If minimum length is set to be greater than maximum length, the scanner only decodes Plessey barcodes with either the minimum or maximum length. If minimum length is same as maximum length, only Plessey barcodes with that length are to be decoded.

99913006

【Set the Minimum Length】

99913007

【Set the Maximum Length】

Example: Set the scanner to decode Plessey barcodes containing between 8 and 12 characters.

1. Scan the **Enter Setup** barcode.
2. Scan the **Set the Minimum Length** barcode.
3. Scan the numeric barcode “8”. (See the “**Digit Barcodes**” section in Chapter 7)
4. Scan the **Save** barcode. (See the “**Save/Cancel Barcodes**” section in Chapter 7)
5. Scan the **Set the Maximum Length** barcode.
6. Scan the numeric barcode “1”.
7. Scan the numeric barcode “2”.
8. Scan the **Save** barcode.
9. Scan the **Exit Setup** barcode.

99900031

**【Enter Setup】

MSI-Plessey

Restore Default Settings

Scan the barcode below to restore all parameters in MSI-Plessey configuration to the factory default settings. To find the related default settings, see the "**Default Parameters Table**" section in Chapter 7.

99913100

【Restore the Default Settings of MSI-Plessey】

Enable/Disable MSI-Plessey

MSI-Plessey is disabled by default.

99913102

【Enable MSI-Plessey】

99913101

**【Disable MSI-Plessey】

Note: If the scanner fails to identify MSI-Plessey barcodes, you may first try this solution by scanning the **Enter Setup** barcode and then **Enable MSI-Plessey** barcode.

99900032

【Exit Setup】

99900031

**【Enter Setup】

Set Code ID

Code ID can only consist of one or two English letters. See the "**Code ID Table**" section in Chapter 7 to find the default Code ID for MSI-Plessey.

To set the Code ID, scan the **Set Code ID for MSI-Plessey** barcode, the numeric barcodes corresponding to the hexadecimal value of a desired ID and the **Save** barcode.

【Set Code ID for MSI-Plessey】

Example: Set the Code ID of MSI-Plessey to "p" (its hexadecimal value is 0x70)

1. Scan the **Enter Setup** barcode.
2. Scan the **Set Code ID for MSI-Plessey** barcode.
3. Scan the numeric barcodes "7" and "0". (See the "**Digit Barcodes**" section in Chapter 7)
4. Scan the **Save** barcode. (See the "**Save/Cancel Barcodes**" section in Chapter 7)
5. Scan the **Exit Setup** barcode.

**【Enter Setup】

Check Digit Verification

Check digits are optional for MSI-Plessey and can be added as the last one or two digits, which are calculated values used to verify the integrity of the data. By default, the scanner does not transmit check digit after verification (One Check Digit, MOD10).

If the **Disable** option is enabled, the scanner transmits MSI-Plessey barcodes as is.

【Disable】

**【One Check Digit, MOD10】

【Two Check Digits, MOD10/MOD10】

【Two Check Digits, MOD10/MOD11】

**【Do Not Transmit Check Digit】

【Transmit Check Digit】

Note: If you select a check digit algorithm and the **Do Not Transmit Check Digit** option, MSI-Plessey barcodes with a length that is less than the configured minimum length after having the check digit(s) excluded will not be decoded. (For example, when the **One Check Digit, MOD10** and **Do Not Transmit Check Digit** options are enabled and the minimum length is set to 4, MSI-Plessey barcodes with a total length of 4 characters including the check digit cannot be read.)

【Exit Setup】

99900031

**【Enter Setup】

Set Length Range for MSI-Plessey

The scanner can be configured to only decode MSI-Plessey barcodes with lengths that fall between (inclusive) the minimum and maximum lengths. To accomplish it, you need to set the minimum and maximum lengths.

If minimum length is set to be greater than maximum length, the scanner only decodes MSI-Plessey barcodes with either the minimum or maximum length. If minimum length is same as maximum length, only MSI-Plessey barcodes with that length are to be decoded.

99913111

【Set the Minimum Length】

99913112

【Set the Maximum Length】

Example: Set the scanner to decode MSI-Plessey barcodes containing between 8 and 12 characters.

1. Scan the **Enter Setup** barcode.
2. Scan the **Set the Minimum Length** barcode.
3. Scan the numeric barcode “8”. (See the “**Digit Barcodes**” section in Chapter 7)
4. Scan the **Save** barcode. (See the “**Save/Cancel Barcodes**” section in Chapter 7)
5. Scan the **Set the Maximum Length** barcode.
6. Scan the numeric barcode “1”.
7. Scan the numeric barcode “2”.
8. Scan the **Save** barcode.
9. Scan the **Exit Setup** barcode.

99900031

**【Enter Setup】

GS1 Databar

Restore Default Settings

Scan the barcode below to restore all parameters in GS1 Databar configuration to the factory default settings. To find the related default settings, see the "**Default Parameters Table**" section in Chapter 7.

99913200

【Restore the Default Settings of GS1 Databar】

Enable/Disable GS1 Databar

GS1 Databar is enabled by default.

99913202

**【Enable GS1 Databar】

99913201

【Disable GS1 Databar】

Note: If the scanner fails to identify GS1 Databar barcodes, you may first try this solution by scanning the **Enter Setup** barcode and then **Enable GS1 Databar** barcode.

99900032

99900031

**【Enter Setup】

Set Code ID

Code ID can only consist of one or two English letters. See the "**Code ID Table**" section in Chapter 7 to find the default Code ID for GS1 Databar.

To set the Code ID, scan the **Set Code ID for GS1 Databar** barcode, the numeric barcodes corresponding to the hexadecimal value of a desired ID and the **Save** barcode.

99913203

【Set Code ID for GS1 Databar】

Example: Set the Code ID of GS1 Databar to "p" (its hexadecimal value is 0x70)

1. Scan the **Enter Setup** barcode.
2. Scan the **Set Code ID for GS1 Databar** barcode.
3. Scan the numeric barcodes "7" and "0". (See the "**Digit Barcodes**" section in Chapter 7)
4. Scan the **Save** barcode. (See the "**Save/Cancel Barcodes**" section in Chapter 7)
5. Scan the **Exit Setup** barcode.

**【Enter Setup】

PDF417

Restore Default Settings

Scan the barcode below to restore all parameters in PDF417 configuration to the factory default settings. To find the related default settings, see the "**Default Parameters Table**" section in Chapter 7.

【Restore the Default Settings of PDF417】

Enable/Disable PDF417

PDF417 is enabled by default.

**【Enable PDF417】

【Disable PDF417】

Note:

- If the scanner fails to identify PDF417 barcodes, you may first try this solution by scanning the **Enter Setup** barcode and then **Enable PDF417** barcode.
- Maximum length supported**:** 255 bytes.

【Exit Setup】

99900031

**【Enter Setup】

Set Code ID

Code ID can only consist of one or two English letters. See the "**Code ID Table**" section in Chapter 7 to find the default Code ID for PDF417.

To set the Code ID, scan the **Set Code ID for PDF417** barcode, the numeric barcodes corresponding to the hexadecimal value of a desired ID and the **Save** barcode.

99920115

【Set Code ID for PDF417】

Example: Set the Code ID of PDF417 to "p" (its hexadecimal value is 0x70)

1. Scan the **Enter Setup** barcode.
2. Scan the **Set Code ID for PDF417** barcode.
3. Scan the numeric barcodes "7" and "0". (See the "**Digit Barcodes**" section in Chapter 7)
4. Scan the **Save** barcode. (See the "**Save/Cancel Barcodes**" section in Chapter 7)
5. Scan the **Exit Setup** barcode.

99900032

**【Enter Setup】

Set Length Range for PDF417

The scanner can be configured to only decode PDF417 barcodes with lengths that fall between (inclusive) the minimum and maximum lengths. To accomplish it, you need to set the minimum and maximum lengths.

Minimum length is not allowed to be greater than maximum length. If you only want to read PDF417 barcodes with a specific length, set both minimum and maximum lengths to be that desired length.

【Set the Minimum Length】

【Set the Maximum Length】

Example: Set the scanner to decode PDF417 barcodes containing between 8 and 12 bytes.

1. Scan the **Enter Setup** barcode.
2. Scan the **Set the Minimum Length** barcode.
3. Scan the numeric barcode “8”. (See the “**Digit Barcodes**” section in Chapter 7)
4. Scan the **Save** barcode. (See the “**Save/Cancel Barcodes**” section in Chapter 7)
5. Scan the **Set the Maximum Length** barcode.
6. Scan the numeric barcode “1”.
7. Scan the numeric barcode “2”.
8. Scan the **Save** barcode.
9. Scan the **Exit Setup** barcode.

【Exit Setup】

99900031

**【Enter Setup】

Sample Barcodes

When reading a PDF417 barcode, you need to scan it horizontally from the top/bottom row of the barcode to the bottom/top.

Apart from the influence of barcode density, consecutive horizontal scans are essential for accomplishing a good read. The greater the row height is, the easier it is to decode a PDF417 barcode.

Listed below are some sample barcodes (15 mil).

【新大陆自动识别技术有限公司】

【12345678901234567890】

【abcdefghijklmnopqrstuvwxyz】

99900032

【Exit Setup】

**【Enter Setup】

MicroPDF417

Restore Default Settings

Scan the barcode below to restore all parameters in PDF417 configuration to the factory default settings. To find the related default settings, see the "**Default Parameters Table**" section in Chapter 7.

【Restore the Default Settings of MicroPDF417】

Enable/Disable MicroPDF417

MicroPDF417 is disabled by default.

【Enable MicroPDF417】

**【Disable MicroPDF417】

Note:

- If the scanner fails to identify MicroPDF417 barcodes, you may first try this solution by scanning the **Enter Setup** barcode and then **Enable MicroPDF417** barcode.
- Maximum length supported: 255 bytes.

【Exit Setup】

99900031

**【Enter Setup】

Set Code ID

Code ID can only consist of one or two English letters. See the "**Code ID Table**" section in Chapter 7 to find the default Code ID for MicroPDF417.

To set the Code ID, scan the **Set Code ID for MicroPDF417** barcode, the numeric barcodes corresponding to the hexadecimal value of a desired ID and the **Save** barcode.

99921115

【Set Code ID for MicroPDF417】

Example: Set the Code ID of MicroPDF417 to "p" (its hexadecimal value is 0x70)

1. Scan the **Enter Setup** barcode.
2. Scan the **Set Code ID for MicroPDF417** barcode.
3. Scan the programming barcodes for "7" and "0". (See the "**Digit Barcodes**" section in Chapter 7)
4. Scan the **Save** barcode. (See the "**Save/Cancel Barcodes**" section in Chapter 7)
5. Scan the **Exit Setup** barcode.

Set Length Range for MicroPDF417

The scanner can be configured to only decode MicroPDF417 barcodes with lengths that fall between (inclusive) the minimum and maximum lengths. To accomplish it, you need to set the minimum and maximum lengths.

Minimum length is not allowed to be greater than maximum length. If you only want to read MicroPDF417 barcodes with a specific length, set both minimum and maximum lengths to be that desired length.

99921103

【Set the Minimum Length】

99921104

【Set the Maximum Length】

Example: Set the scanner to decode MicroPDF417 barcodes containing between 8 and 12 bytes.

1. Scan the **Enter Setup** barcode.
2. Scan the **Set the Minimum Length** barcode.
3. Scan the numeric barcode “8”. (See the “**Digit Barcodes**” section in Chapter 7)
4. Scan the **Save** barcode. (See the “**Save/Cancel Barcodes**” section in Chapter 7)
5. Scan the **Set the Maximum Length** barcode.
6. Scan the numeric barcode “1”.
7. Scan the numeric barcode “2”.
8. Scan the **Save** barcode.
9. Scan the **Exit Setup** barcode.

99900031

**【Enter Setup】

Sample Barcodes

When reading a MicroPDF417 barcode, you need to scan it horizontally from the top/bottom row of the barcode to the bottom/top.

Apart from the influence of barcode density, consecutive horizontal scans are essential for accomplishing a good read. The greater the row height is, the easier it is to decode a MicroPDF417 barcode.

Listed below are some sample barcodes (15 mil).

【新大陆自动识别技术有限公司】

【12345678901234567890】

99900032

【Exit Setup】

99900031

**【Enter Setup】

【abcdefghijklmnopqrstuvwxyz】

99900032

【Exit Setup】

**【Enter Setup】

Chapter 7 Data Formatter

Introduction

You may use the Data Formatter to modify the scanner's output. For example, you can use the Data Formatter to insert characters at certain points in barcode data or to suppress/ replace/ send certain characters in barcode data as it is scanned.

Normally, when you scan a barcode, it gets outputted automatically; however, when you create a format, you must use a "send" command (see the "Send Commands " section) within the format programming to output data. The maximum size of formatter commands in a data format is 116 characters (non-alphanumeric characters excluded).

Add a Data Format

Data format is used to edit barcode data only. You can program up to four data formats, i.e. Format_0, Format_1, Format_2 and Format_3. When you create a data format, you must specify the application scope of your data format (such as barcode type and data length) and include formatter commands. When scanned data does not match your data format requirements, you will hear the non-match error beep (if the non-match error beep is ON).

There are two methods to program a data format: Programming with barcodes and programming with serial commands.

Programming with Barcodes

The following explains how to program a data format by scanning the specific barcodes. Scanning any irrelevant barcode or failing to follow the setting procedure will result in programming failure. To find the alphanumeric barcodes needed to create a data format, see the "Digit Barcodes" section in Appendix.

Step 1: Scan the **Enter Setup** barcode.

Step 2: Scan the **Add Data Format** barcode.

【Add Data Format】

【Exit Setup】

**【Enter Setup】

Step 3: Select data format.

Scan a numeric barcode **0** or **1** or **2** or **3** to set this to Format_0 or Format_1 or Format_2 or Format_3.

Step 4: Select formatter command type.

Specify what type of formatter commands will be used. Scan a numeric barcode **6** to select formatter command type 6. (See the "Formatter Command Type 6" section in this chapter for more information).

Step 5: Set interface type.

Scan **999** for any interface type.

Step 6: Set Symbology ID Number.

Refer to the "Symbology ID Number" section in Appendix and find the symbology to which you want to apply the data format. Scan three numeric barcodes for the symbology ID number. If you wish to create a data format for all symbologies, scan **999**.

Step 7: Set barcode data length

Specify what length of data will be acceptable for this symbology. Scan the four numeric barcodes that represent the data length. **9999** is a universal number, indicating all lengths. For example, 32 characters should be entered as **0032**.

Step 8: Enter formatter command

Refer to the "Data Formatter Commands" section in this chapter. Scan the alphanumeric barcodes that represent the command you need to edit data. For example, when a command is F141, you should scan "F", "1", "4" and "1". A command can contain up to 116 characters.

Step 9: Scan the **Save** barcode from the "Save/Cancel Barcodes" section in Appendix to save your data format.

Example: Program format_0 using formatter command type 6, Code 128 containing 10 characters applicable, send all characters followed by "A".

1. Scan the **Enter Setup** barcode	Enter the Setup mode
2. Scan the **Add Data Format** barcode	Add a data format
3. Scan the **0** barcode	Select format_0
4. Scan the **6** barcode	Select formatter command type 6
5. Scan the **9** barcode three times	All interface types applicable
6. Scan the barcodes **002**	Only Code 128 applicable
7. Scan the barcodes **0010**	Only a length of 10 characters applicable
8. Scan the alphanumeric barcodes **F141**	Send all characters followed by "A" (hex: 41)
9. Scan the **Save** barcode	Save the data format

**【Enter Setup】

Programming with Serial Commands

A data format can also be created by serial commands sent from the host device. The maximum size of a command string is 128 characters (non-alphanumeric characters excluded). The syntax consists of the following elements:

Start of command: "(", 1 character.

Data format: "0"~"3", 1 character. "0", "1", "2" and "3" represent Format_0, Format_1, Format_2 and Format_3 respectively.

Formatter command type: "6", 1 character.

Interface type: "999", 3 characters.

Symbology ID Number: The ID number of the symbology to which you want to apply the data format, 3 characters. 999 indicates all symbologies.

Data length: The length of data that will be acceptable for this symbology, 4 characters. 9999 indicates all lengths. For example, 32 characters should be entered as 0032.

Formatter commands: The command string used to edit data, max. 116 characters. For more information, see the "Formatter Command Type 6" section in this chapter.

End of command: "))))", 4 characters.

Note: A command string used to create a data format must conform to the syntax above. Returned message "S" indicates success; returned message "F" indicates failure.

Example: Program format_0 using formatter command type 6, Code 128 containing 10 characters applicable, send all characters followed by "A".

Command string: **(069990020010F141))))**

【Exit Setup】

**【Enter Setup】

Enable Data Format

After enabling the Data Formatter, you may select a data format you want to use by scanning the appropriate barcode below.

**【Format_0】

【Format_1】

【Format_2】

【Format_3】

Change Data Format for a Single Scan

You can switch between data formats for a single scan. The next barcode is scanned using the data format selected here, then reverts to the format you have selected above. For example, you may have set your scanner to the data format you saved as Format_3. You can switch to Format_1 for a single trigger pull by scanning the **Single Scan – Format_1** barcode below. The next barcode that is scanned uses Format_1, then reverts back to Format_3.

Note: This setting will be lost by removing power from the scanner, or turning off/ rebooting the device.

【Single Scan – Format_0】

【Single Scan – Format_1】

【Single Scan – Format_2】

【Single Scan – Format_3】

【Exit Setup】

99900031

**【Enter Setup】

Enable/Disable Data Formatter

When Data Formatter is disabled, the data format you have enabled becomes invalid.

99904501

**【Disable Data Formatter】

You may wish to require the data to conform to a data format you have created. The following settings can be applied to your data format:

Enable Data Formatter, Required, Keep Prefix/Suffix: Scanned data that meets your data format requirements is modified accordingly and gets outputted along with prefixes and suffixes (if prefix and suffix are enabled). Any data that does not match your data format requirements generates an error beep (if Non-Match Error Beep is turned ON) and the data in that barcode is not transmitted.

Enable Data Formatter, Required, Drop Prefix/Suffix: Scanned data that meets your data format requirements is modified accordingly and gets outputted without prefixes and suffixes (even if prefix and suffix are enabled). Any data that does not match your data format requirements generates an error beep (if Non-Match Error Beep is turned ON) and the data in that barcode is not transmitted.

Enable Data Formatter, Not Required, Keep Prefix/Suffix: Scanned data that meets your data format requirements is modified accordingly and gets outputted along with prefixes and suffixes (if prefix and suffix are enabled). Barcode data that does not match your data format requirements is transmitted as read along with prefixes and suffixes (if prefix and suffix are enabled).

Enable Data Formatter, Not Required, Drop Prefix/Suffix: Scanned data that meets your data format requirements is modified accordingly and gets outputted without prefixes and suffixes (even if prefix and suffix are enabled). Barcode data that does not match your data format requirements is transmitted as read along with prefixes and suffixes (if prefix and suffix are enabled).

99900031

**【Enter Setup】

99904505

【Enable Data Formatter, Required, Keep Prefix/Suffix】

99904503

【Enable Data Formatter, Required, Drop Prefix/Suffix】

99904504

【Enable Data Formatter, Not Required, Keep Prefix/Suffix】

99904502

【Enable Data Formatter, Not Required, Drop Prefix/Suffix】

Non-Match Error Beep

If Non-Match Error Beep is turned ON, the scanner generates an error beep when a barcode is encountered that does not match your required data format.

99904523

【Non-Match Error Beep OFF】

99904522

**【Non-Match Error Beep ON】

99900032

99900031

**【Enter Setup】

Clear Data Format

There are two methods to remove data format from your scanner:

Delete one data format: Scan the **Clear One** barcode, a numeric barcode (0-3) and the **Save** barcode. For example, to delete Format_2, you should scan the **Clear One** barcode, the **2** barcode and the **Save** barcode

Delete all data formats: Scan the **Clear All** barcode.

99904516

【Clear All】

99904517

【Clear One】

Query Data Formats

You may scan the appropriate barcode below to get the information of data format(s) created by you or preset by manufacturer. For instance, if you have added Format_0 as per the example in the **"Programming with Barcodes"** section in this chapter, scanning the **Query Current Data Formats** barcode, you will get the result: **Data Format0:069990020010F141;**.

99904520

【Query Current Data Formats】

99904521

【Query Preset Data Formats】

99900032

【Exit Setup】

99900031

**【Enter Setup】

Formatter Command Type 6

Send Commands

F1 Send all characters

Syntax=F1xx (xx: The insert character's hex value)

Include in the output message all of the characters from the input message, starting from current cursor position, followed by an insert character.

F2 Send a number of characters

Syntax=F2nnxx (nn: The numeric value (00-99) for the number of characters; xx: The insert character's hex value)

Include in the output message a number of characters followed by an insert character. Start from the current cursor position and continue for "nn" characters or through the last character in the input message, followed by character "xx."

F2 Example: Send a number of characters

Send the first 10 characters from the barcode above, followed by a carriage return.

Command string: **F2100D**

F2 is the "Send a number of characters" command

10 is the number of characters to send

0D is the hex value for a CR

The data is output as: **1234567890**
<CR>

99900032

【Exit Setup】

99900031

**【Enter Setup】

F3 Send all characters up to a particular character

Syntax=F3ssxx (ss: The particular character's hex value; xx: The insert character's hex value)

Include in the output message all characters from the input message, starting with the character at the current cursor position and continuing to, but not including, the particular character "ss," followed by character "xx." The cursor is moved forward to the "ss" character.

F3 Example: Send all characters up to a particular character

Using the barcode above, send all characters up to but not including "D," followed by a carriage return.

Command string: **F3440D**

F3 is the "Send all characters up to a particular character" command

44 is the hex value for a "D"

0D is the hex value for a CR

The data is output as: **1234567890ABC**
<CR>

E9 Send all but the last characters

Syntax=E9nn (nn: The numeric value (00-99) for the number of characters that will not be sent at the end of the message)

Include in the output message all but the last "nn" characters, starting from the current cursor position. The cursor is moved forward to one position past the last input message character included.

99900031

**【Enter Setup】

F4 Insert a character multiple times

Syntax=F4xxnn (xx: The insert character's hex value; nn: The numeric value (00-99) for the number of times it should be sent)

Send "xx" character "nn" times in the output message, leaving the cursor in the current position.

E9 and F4 Example: Send all but the last characters, followed by 2 tabs

Send all characters except for the last 8 from the barcode above, followed by 2 tabs.

Command string: **E908F40902**

E9 is the "Send all but the last characters" command

08 is the number of characters at the end to ignore

F4 is the "Insert a character multiple times" command

09 is the hex value for a horizontal tab

02 is the number of time the tab character is sent

The data is output as: **1234567890AB<tab><tab>**

B3 Insert symbology name

Insert the name of the barcode's symbology in the output message, without moving the cursor.

B4 Insert barcode length

Insert the barcode's length in the output message, without moving the cursor. The length is expressed as a numeric string and does not include leading zeros.

99900031

**【Enter Setup】

B3 and B4 Example: Insert the symbology name and length

Send the symbology name and length before the barcode data from the barcode above. Break up these insertions with spaces. End with a carriage return.

Command string: **B3F42001B4F42001F10D**

B3 is the “Insert symbology name” command

F4 is the “Insert a character multiple times” command

20 is the hex value for a space

01 is the number of time the space character is sent

B4 is the “Insert barcode length” command

F4 is the “Insert a character multiple times” command

20 is the hex value for a space

01 is the number of time the space character is sent

F1 is the “Send all characters” command

0D is the hex value for a CR

The data is output as: **Code128 20 1234567890ABCDEFGHIJ**
<CR>

Move Commands

F5 Move the cursor forward a number of characters

Syntax=F5nn (nn: The numeric value (00-99) for the number of characters the cursor should be moved ahead)

Move the cursor ahead “nn” characters from current cursor position.

99900031

**【Enter Setup】

F5 Example: Move the cursor forward and send the data

Move the cursor forward 3 characters, then send the rest of the barcode data from the barcode above. End with a carriage return.

Command string: **F503F10D**

F5 is the “Move the cursor forward a number of characters” command

03 is the number of characters to move the cursor

F1 is the “Send all characters” command

0D is the hex value for a CR

The data is output as: **4567890ABCDEFGHIJ**
<CR>

F6 Move the cursor backward a number of characters

Syntax=F6nn (nn: The numeric value (00-99) for the number of characters the cursor should be moved back)

Move the cursor back “nn” characters from current cursor position.

F7 Move the cursor to the beginning

Syntax＝F7

Move the cursor to the first character in the input message.

EA Move the cursor to the end

Syntax＝EA

Move the cursor to the last character in the input message.

99900032

【Exit Setup】

99900031

**【Enter Setup】

Search Commands

F8 Search forward for a character

Syntax＝F8xx (xx: The search character's hex value)

Search the input message forward for "xx" character from the current cursor position, leaving the cursor pointing to the "xx" character.

F8 Example: Send barcode data that starts after a particular character

Search for the letter "D" in barcodes and send all the data that follows, including the "D". Using the barcode above:

Command string: **F844F10D**

F8 is the "Search forward for a character" command

44 is the hex value for "D"

F1 is the "Send all characters" command

0D is the hex value for a CR

The data is output as: **DEFGHIJ**

<CR>

F9 Search backward for a character

Syntax＝F9xx (xx: The search character's hex value)

Search the input message backward for "xx" character from the current cursor position, leaving the cursor pointing to the "xx" character.

99900031

**【Enter Setup】

B0 Search forward for a string

Syntax=B0nnnnS (nnnn: The string length (up to 9999); S: The ASCII hex value of each character in the string)

Search forward for “S” string from the current cursor position, leaving cursor pointing to “S” string. For example, B0000454657374 will search forward for the first occurrence of the 4-character string “Test.”

B0 Example: Send barcode data that starts after a string of characters

Search for the letters “FGH” in barcodes and send all the data that follows, including “FGH.” Using the barcode above:

Command string: **B00003464748F10D**

B0 is the “Search forward for a string” command

0003 is the string length (3 characters)

46 is the hex value for “F”

47 is the hex value for “G”

48 is the hex value for “H”

F1 is the “Send all characters” command

0D is the hex value for a CR

The data is output as: **FGHIJ**
<CR>

B1 Search backward for a string

Syntax＝B1nnnnS (nnnn: The string length (up to 9999); S: The ASCII hex value of each character in the string)

Search backward for “S” string from the current cursor position, leaving cursor pointing to “S” string. For example, B1000454657374 will search backward for the first occurrence of the 4-character string “Test.”

99900032

【Exit Setup】

99900031

**【Enter Setup】

E6 Search forward for a non-matching character

Syntax=E6xx (xx: The search character's hex value)

Search the input message forward for the first non-"xx" character from the current cursor position, leaving the cursor pointing to the non-"xx" character.

E6 Example: Remove zeros at the beginning of barcode data

This example shows a barcode that has been zero filled. You may want to ignore the zeros and send all the data that follows. E6 searches forward for the first character that is not zero, then sends all the data after, followed by a carriage return. Using the barcode above:

Command string: **E630F10D**

E6 is the "Search forward for a non-matching character" command

30 is the hex value for 0

F1 is the "Send all characters" command

0D is the hex value for a CR

The data is output as: **37692**

<CR>

E7 Search backward for a non-matching character

Syntax＝E7xx (xx: The search character's hex value)

Search the input message backward for the first non-"xx" character from the current cursor position, leaving the cursor pointing to the non-"xx" character.

99900031

**【Enter Setup】

Miscellaneous Commands

FB Suppress characters

Syntax＝FBnnxxyy..zz (nn: The numeric value (00-15) for the number of suppressed characters; xxyy..zz: The hex value of the characters to be suppressed)

Suppress all occurrences of up to 15 different characters, starting at the current cursor position, as the cursor is advanced by other commands.

FB Example: Remove spaces in barcode data

This example shows a barcode that has spaces in the data. You may want to remove the spaces before sending the data. Using the barcode above:

Command string: **FB0120F10D**

FB is the “Suppress characters” command

01 is the number of the characters to be suppressed

20 is the hex value for a space

F1 is the “Send all characters” command

0D is the hex value for a CR

The data is output as: **34567890**

<CR>

E4 Replace characters

Syntax＝E4nnxx$_1$xx$_2$yy$_1$yy$_2$…zz$_1$zz$_2$ (nn: The total count of the number of characters (characters to be replaced plus replacement characters; xx$_1$: The characters to be replaced, xx$_2$: The replacement characters, continuing through zz$_1$ and zz$_2$)

Replace up to 15 characters in the output message, without moving the cursor.

99900032

【Exit Setup】

99900031

**【Enter Setup】

E4 Example: Replace zeros with CRs in barcode data

If the barcode has characters that the host application does not want included, you can use the E4 command to replace those characters with something else. In this example, you will replace the zeros in the barcode above with carriage returns.

Command string: **E402300DF10D**

E4 is the “Replace characters” command

02 is the total count of characters to be replaced, plus the replacement characters (0 is replaced by CR, so total characters=2)

30 is the hex value for 0

0D is the hex value for a CR (the character that will replace the 0)

F1 is the “Send all characters” command

0D is the hex value for a CR

The data is output as: **1234**
5678
ABC
<CR>

99900032

【Exit Setup】

Appendix

Factory Defaults Table

Parameter		Factory Default	Remark
General Settings			
Setup Mode		Enabled	
Scan Mode		Manual Mode	
Wireless Communication Mode		Synchronous Mode	
Host Acknowledgment		Disabled	Only applicable to Synchronous mode
Host Acknowledgment Timeout		3s	
Stored Data after Batch Transmission		Auto Delete	Only applicable to Batch mode
Batch Mode Same Barcode Reading		Enabled	Only applicable to Batch mode
Batch Mode Transmit Delay		No Transmit Delay (0ms)	Only applicable to Batch mode
Decode Session Timeout		15 seconds	00~15 (00: Infinite; 01~15: 1~15sec)
Timeout between Decodes		1 second	00~15 (0~7.5sec)
Sensitivity		High Sensibility	Applicable to the Sense mode
Security		Level 1	
Good Read Beep		Medium-Pitched Loud Beep, 150ms	Beep notification after good read
Reread Same Barcode	Manual Mode	Reread Same Barcode with No Delay	
	Auto Mode	Disabled	
	Continuous Mode	Enabled	
	Sense Mode	Enabled	
Timeout between Decodes (Same Barcode) (For the Manual, Continuous and Sense modes only)		1.6 seconds	0~120 (0~12.0s); 127: Infinite
Recalculate Timeout After Good Read		Enabled	Applicable to the Auto mode
Number of Barcodes per Scan		Read One Barcode Nearest to the Center Per Scan	

Parameter	Factory Default	Remark
Output Interval	0ms	
Power-Off Timeout	5 minutes	Applicable to the Manual mode
Communication Settings		
Baud Rate	115200bps	RS-232
Parity Check	None	RS-232
Stop Bits	1 bit	RS-232
Flow Control	None	RS-232
Data Bits	8 bits	RS-232
USB HID-KBW	Enabled	
Examine KBW Connection	Enabled	USB HID-KBW
USB Enumeration	On	USB HID-KBW
Keyboard Layout	1- US (English)	USB HID-KBW
Inter-Character Delay	0ms	USB HID-KBW 00-15(0-75ms)
Convert Case	No Case Conversion	USB HID-KBW
Emulate ALT + Keypad	Disabled	USB HID-KBW
Function Key Mapping	Disabled	USB HID-KBW
Emulate Numeric Keypad	Disabled	USB HID-KBW
Prefix & Suffix		
Prefix Sequence	Code ID+Custom+AIM ID	
AIM ID Prefix	Disabled	
Code ID Prefix	Disabled	1 or 2 English letters
Custom Prefix	Disabled	Max. length: 11 characters
Custom Suffix	Disabled	Max. length: 11 characters
Terminating Character Suffix	Enabled	
Terminating Character	0x0D,0x0A	
Symbologies		
Code 128		
Code 128	Enabled	
Maximum Length	255	

Parameter	Factory Default	Remark
Minimum Length	1	
UCC/EAN-128		
UCC/EAN-128	Enabled	
Maximum Length	255	
Minimum Length	1	
AIM 128		
AIM 128	Disabled	
Maximum Length	255	
Minimum Length	1	
EAN-8		
EAN-8	Enabled	
Check Digit	Transmit	
2-Digit Add-On Code	Disabled	
5-Digit Add-On Code	Disabled	
Decode EAN-8 + 2-digit Add-On Code Only	Disabled	
Decode EAN-8 + 5-digit Add-On Code Only	Disabled	
Extend to EAN-13	Disabled	
Convert to EAN-13	Disabled	
EAN-13		
EAN-13	Enabled	
Check Digit	Transmit	
2-Digit Add-On Code	Disabled	
5-Digit Add-On Code	Disabled	
Decode EAN-13 + 2-digit Add-On Code Only	Disabled	
Decode EAN-13 + 5-digit Add-On Code Only	Disabled	
EAN-13 Beginning with 290 Add-On Code Required	Do Not Require Add-On Code	
EAN-13 Beginning with 378/379 Add-On Code Required	Do Not Require Add-On Code	
EAN-13 Beginning with 414/419 Add-On Code Required	Do Not Require Add-On Code	

Parameter	Factory Default	Remark
EAN-13 Beginning with 434/439 Add-On Code Required	Do Not Require Add-On Code	
EAN-13 Beginning with 977 Add-On Code Required	Do Not Require Add-On Code	
EAN-13 Beginning with 978 Add-On Code Required	Do Not Require Add-On Code	
EAN-13 Beginning with 979 Add-On Code Required	Do Not Require Add-On Code	
ISSN		
ISSN	Disabled	
ISBN		
ISBN	Disabled	
ISBN Format	ISBN-13	
UPC-E		
UPC-E	Enabled	
Check Digit	Transmit	
2-Digit Add-On Code	Disabled	
5-Digit Add-On Code	Disabled	
Decode UPC-E + 2-digit Add-On Code Only	Disabled	
Decode UPC-E + 5-digit Add-On Code Only	Disabled	
Extend to UPC-A	Disabled	
Convert to UPC-A	Disabled	
System Character “0”	Do not transmit	
UPC-A		
UPC-A	Enabled	
Check Digit	Transmit	
2-Digit Add-On Code	Disabled	
5-Digit Add-On Code	Disabled	
Decode UPC-A + 2-digit Add-On Code Only	Disabled	
Decode UPC-A + 5-digit Add-On Code Only	Disabled	
System Character	Transmit	

Parameter	Factory Default	Remark
Country Code	Do not transmit	
Interleaved 2 of 5		
Interleaved 2 of 5	Enabled	
Check Digit Verification	Enabled	
Check Digit	Do not transmit	
Maximum Length	255	
Minimum Length	6	Min. length supported: 5
Febraban	Disabled	
ITF-6		
ITF-6	Disabled	
Check Digit	Do not transmit	
ITF-14		
ITF-14	Disabled	
Check Digit	Do not transmit	
Deutshe 14		
Deutshe 14	Disabled	
Check Digit	Do not transmit	
Deutshe 12		
Deutshe 12	Disabled	
Check Digit	Do not transmit	
COOP 25 (Japanese Matrix 2 of 5)		
COOP 25	Disabled	
Check Digit Verification	Disabled	
Check Digit	Do not transmit	
Maximum Length	255	
Minimum Length	6	Min. length supported: 3
Matrix 2 of 5 (European Matrix 2 of 5)		
Matrix 2 of 5	Enabled	
Check Digit Verification	Disabled	
Check Digit	Do not transmit	

Parameter	Factory Default	Remark
Maximum Length	255	
Minimum Length	6	Min. length supported: 3
Industrial 25		
Industrial 25	Enabled	
Check Digit Verification	Disabled	
Check Digit	Do not transmit	
Maximum Length	255	
Minimum Length	6	Min. length supported: 4
Standard 25		
Standard 25	Enabled	
Check Digit Verification	Disabled	
Check Digit	Do not transmit	
Maximum Length	255	
Minimum Length	6	Min. length supported: 4
Code 39		
Code 39	Enabled	
Check Digit Verification	Disabled	
Code 39 Check Digit	Do not transmit	
Code 39 Start/Stop Character	Transmit	
Code 39 Full ASCII	Enabled	
Code 32	Disabled	
Code 32 Prefix	Disabled	
Code 32 Check Digit	Do not transmit	
Code 32 Start/Stop Character	Do not transmit	
Maximum Length	255	
Minimum Length	4	Min. length supported: 4 (including start/stop characters and check digit)
Codabar		
Codabar	Enabled	
Check Digit Verification	Disabled	

Parameter	Factory Default	Remark
Check Digit	Do not transmit	
Start/Stop Character	ABCD/ABCD format Transmit	
Maximum Length	255	
Minimum Length	4	Min. length supported: 2
Code 93		
Code 93	Enabled	
Check Digit Verification	Enabled	
Check Digit	Do not transmit	
Maximum Length	255	
Minimum Length	2	Min. length supported: 1
Code 11		
Code 11	Disabled	
Check Digit	Do not transmit	
Check Digit Verification	1 Check Digit, MOD11	
Maximum Length	255	
Minimum Length	4	Min. length supported: 3
Plessey		
Plessey	Disabled	
Check Digit Verification	Enabled	
Check Digit	Do not transmit	
Maximum Length	255	
Minimum Length	4	Min. length supported: 4
MSI-Plessey		
MSI-Plessey	Disabled	
Check Digit	Do not transmit	
Check Digit Verification	1 Check Digit, MOD10	
Maximum Length	255	
Minimum Length	4	Min. length supported: 3
GS1 Databar		

Parameter	Factory Default	Remark
GS1 Databar	Enabled	
PDF 417		
PDF 417	Enabled	
Maximum Length	255	
Minimum Length	1	
MicroPDF417		
MicroPDF417	Disabled	
Maximum Length	255	
Minimum Length	1	
Data Formatter		
Enable Data Format	Format_0	
Data Formatter	Disabled	
Non-Match Error Beep	On	

AIM ID Table

Symbology	AIM ID	Possible AIM ID Modifiers (m)
Code 128	]C0	
UCC/EAN-128	]C1	
AIM 128	]C2	
EAN-8	]E4	
EAN-13	]E0	
EAN-13 with Add-On	]E3	
ISSN	]X0	
ISBN	]X0	
UPC-E	]E0	
UPC-E with Add-On	]E3	
UPC-A	]E0	
UPC-A with Add-On	]E3	
Interleaved 2 of 5	]Im	0,1,3
ITF-6	]Im	1,3
ITF-14	]Im	1,3
Deutsche 14	]X0	
Deutsche 12	]X0	
COOP 25（Japanese Matrix 2 of 5）	]X0	
Matrix 2 of 5(European Matrix 2 of 5)	]X0	
Industrial 25	]S0	
Standard 25	]R0	
Code 39, Code 32	]Am	0,1,3,4,5,7
Codabar	]Fm	0,2,4
Code 93	]G0	
Code 11	]Hm	0,1,3
Plessey	]P0	
MSI-Plessey	]Mm	0,1
GS1 Databar	]e0	
PDF417	]Lm	0,1,2
MicroPDF417	]Lm	3,4,5

Note: “m” represents the AIM modifier character. Refer to ISO/IEC 15424:2008 Information technology – Automatic identification and data capture techniques – Data Carrier Identifiers (including Symbology Identifiers) for AIM modifier character details.

Code ID Table

Symbology	Code ID
Code 128	j
UCC/EAN-128	u
AIM 128	f
ISBT 128	t
EAN-8	g
EAN-13	d
ISSN	n
ISBN	B
UPC-E	h
UPC-A	c
Interleaved 2 of 5	e
ITF-6	r
ITF-14	q
Deutsche 14	w
Deutsche 12	l
COOP 25（Japanese Matrix 2 of 5）	o
Matrix 2 of 5(European Matrix 2 of 5)	v
Industrial 25	i
Standard 25	s
Code 39, Code 32	b
Codabar	a
Code 93	y
Code 11	z
Plessey	p
MSI-Plessey	m
GS1 Databar	R
PDF417	P
MicroPDF417	M

ASCII Table

Hex	Dec	Char
00	0	NUL (Null char.)
01	1	SOH (Start of Header)
02	2	STX (Start of Text)
03	3	ETX (End of Text)
04	4	EOT (End of Transmission)
05	5	ENQ (Enquiry)
06	6	ACK (Acknowledgment)
07	7	BEL (Bell)
08	8	BS (Backspace)
09	9	HT (Horizontal Tab)
0a	10	LF (Line Feed)
0b	11	VT (Vertical Tab)
0c	12	FF (Form Feed)
0d	13	CR (Carriage Return)
0e	14	SO (Shift Out)
0f	15	SI (Shift In)
10	16	DLE (Data Link Escape)
11	17	DC1 (XON) (Device Control 1)
12	18	DC2 (Device Control 2)
13	19	DC3 (XOFF) (Device Control 3)
14	20	DC4 (Device Control 4)
15	21	NAK (Negative Acknowledgement)
16	22	SYN (Synchronous Idle)
17	23	ETB (End of Trans. Block)
18	24	CAN (Cancel)
19	25	EM (End of Medium)
1a	26	SUB (Substitute)
1b	27	ESC (Escape)
1c	28	FS (File Separator)
1d	29	GS (Group Separator)
1e	30	RS (Request to Send)

1f	31	US (Unit Separator)
20	32	SP (Space)
21	33	! (Exclamation Mark)
22	34	" (Double Quote)
23	35	# (Number Sign)
24	36	$ (Dollar Sign)
25	37	% (Percent)
26	38	& (Ampersand)
27	39	` (Single Quote)
28	40	((Left / Opening Parenthesis)
29	41	) (Right / Closing Parenthesis)
2a	42	* (Asterisk)
2b	43	+ (Plus)
2c	44	, (Comma)
2d	45	- (Minus / Dash)
2e	46	. (Dot)
2f	47	/ (Forward Slash)
30	48	0
31	49	1
32	50	2
33	51	3
34	52	4
35	53	5
36	54	6
37	55	7
38	56	8
39	57	9
3a	58	: (Colon)
3b	59	; (Semi-colon)
3c	60	< (Less Than)
3d	61	= (Equal Sign)
3e	62	> (Greater Than)
3f	63	? (Question Mark)
40	64	@ (AT Symbol)
41	65	A

42	66	B
43	67	C
44	68	D
45	69	E
46	70	F
47	71	G
48	72	H
49	73	I
4a	74	J
4b	75	K
4c	76	L
4d	77	M
4e	78	N
4f	79	O
50	80	P
51	81	Q
52	82	R
53	83	S
54	84	T
55	85	U
56	86	V
57	87	W
58	88	X
59	89	Y
5a	90	Z
5b	91	[(Left / Opening Bracket)
5c	92	\ (Back Slash)
5d	93	] (Right / Closing Bracket)
5e	94	^ (Caret / Circumflex)
5f	95	_ (Underscore)
60	96	' (Grave Accent)
61	97	a
62	98	b
63	99	c
64	100	d

65	101	e
66	102	f
67	103	g
68	104	h
69	105	i
6a	106	j
6b	107	k
6c	108	l
6d	109	m
6e	110	n
6f	111	o
70	112	p
71	113	q
72	114	r
73	115	s
74	116	t
75	117	u
76	118	v
77	119	w
78	120	x
79	121	y
7a	122	z
7b	123	{ (Left/ Opening Brace)
7c	124	| (Vertical Bar)
7d	125	} (Right/Closing Brace)
7e	126	~ (Tilde)
7f	127	DEL (Delete)

ASCII Function Key Mapping Table

ASCII Function	ASCII Value (HEX)	No Function Key Mapping	Function Key Mapping
NUL (Null char.)	00	Null	Ctrl+2
SOH (Start of Header)	01	Keypad Enter	Ctrl+A
STX (Start of Text)	02	Caps Lock	Ctrl+B
ETX (End of Text)	03	Null	Ctrl+C
EOT (End of Transmission)	04	Null	Ctrl+D
ENQ (Enquiry)	05	Null	Ctrl+E
ACK (Acknowledgment)	06	Null	Ctrl+F
BEL (Bell)	07	Enter	Ctrl+G
BS (Backspace)	08	Left Arrow	Ctrl+H
HT (Horizontal Tab)	09	Horizontal Tab	Ctrl+I
LF (Line Feed)	0A	Down Arrow	Ctrl+J
VT (Vertical Tab)	0B	Vertical Tab	Ctrl+K
FF (Form Feed)	0C	Delete	Ctrl+L
CR (Carriage Return)	0D	Enter	Ctrl+M
SO (Shift Out)	0E	Insert	Ctrl+N
SI (Shift In)	0F	Esc	Ctrl+O
DLE (Data Link Escape)	10	F11	Ctrl+P
DC1 (XON) (Device Control 1)	11	Home	Ctrl+Q
DC2 (Device Control 2)	12	Print Screen	Ctrl+R
DC3 (XOFF) (Device Control 3)	13	Backspace	Ctrl+S
DC4 (Device Control 4)	14	tab+shift	Ctrl+T
NAK (Negative Acknowledgment)	15	F12	Ctrl+U
SYN (Synchronous Idle)	16	F1	Ctrl+V
ETB (End of Trans. Block)	17	F2	Ctrl+W
CAN (Cancel)	18	F3	Ctrl+X
EM (End of Medium)	19	F4	Ctrl+Y
SUB (Substitute)	1A	F5	Ctrl+Z
ESC (Escape)	1B	F6	See the following table
FS (File Separator)	1C	F7	
GS (Group Separator)	1D	F8	
RS (Request to Send)	1E	F9	
US (Unit Separator)	1F	F10	

ASCII Function Key Mapping Table (Continued)

The function key mappings of the last five characters in the previous table differ from one keyboard layout to another.

Country/ Keyboard Layout	Function Key Mapping				
	1B	1C	1D	1E	1F
United States	Ctrl+[	Ctrl+\	Ctrl+]	Ctrl+6	Ctrl+-
Belgium	Ctrl+[	Ctrl+<	Ctrl+]	Ctrl+6	Ctrl+-
Scandinavia	Ctrl+8	Ctrl+<	Ctrl+9	Ctrl+6	Ctrl+-
France	Ctrl+^	Ctrl+8	Ctrl+$	Ctrl+6	Ctrl+=
Germany		Ctrl+Ã	Ctrl++	Ctrl+6	Ctrl+-
Italy		Ctrl+\	Ctrl++	Ctrl+6	Ctrl+-
Switzerland		Ctrl+<	Ctrl+.	Ctrl+6	Ctrl+-
United Kingdom	Ctrl+[	Ctrl+¢	Ctrl+]	Ctrl+6	Ctrl+-
Denmark	Ctrl+8	Ctrl+\	Ctrl+9	Ctrl+6	Ctrl+-
Norway	Ctrl+8	Ctrl+\	Ctrl+9	Ctrl+6	Ctrl+-
Spain	Ctrl+[	Ctrl+\	Ctrl+]	Ctrl+6	Ctrl+-

Digit Barcodes

After scanning numeric barcode(s), you need to scan the **Save** barcode to save the data.

0~9

【0】

【5】

【1】

【6】

【2】

【7】

【3】

【8】

【4】

【9】

A~F

【A】

【B】

【C】

【D】

【E】

【F】

Save/Cancel Barcodes

After reading numeric barcode(s), you need to scan the **Save** barcode to save the data. If you scan the wrong digit(s), you can either scan the **Cancel the Current Settings** barcode and then start the configuration all over again, or scan the **Delete the Last Digit** barcode and then the correct digit, or scan the **Delete All digits** barcode and then the digits you want.

For instance, after reading the **Maximum Length** barcode and numeric barcodes “1”, “2” and “3”, you scan:

- **Delete the Last Digit:** The last digit “3” will be removed.
- **Delete All Digits:** All digits “123” will be removed.
- **Cancel:** The maximum length configuration will be canceled. And the scanner still remains ready to read programming barcode.

【Save】

【Cancel】

【Delete the Last Digit】

【Delete All Digits】

Symbology ID Number

Symbology	ID Number
Code 128	002
UCC/EAN-128	003
EAN-8	004
EAN-13	005
UPC-E	006
UPC-A	007
Interleaved 2 of 5	008
ITF-14	009
ITF-6	010
Matrix 2 of 5	011
Code 39	013
Codabar	015
Code 93	017
AIM-128	020
COOP 25	022
ISSN	023
ISBN	024
Industrial 25	025
Standard 25	026
Plessey	027
Code 11	028
MSI-Plessey	029
GS1 Databar	031
PDF417	032
MicroPDF417	042
Deutsche 14	128
Deutsche 12	129

Headquarters
Fujian Newland Auto-ID Tech. Co., Ltd.
3F, Building A, No.1, Rujiang West Rd., Mawei, Fuzhou, Fujian, China 350015
TEL: +86 - (0) 591-83978605
FAX: +86 - (0) 591-83979216
E-mail: marketing@nlscan.com
WEB：www.nlscan.com

Newland Europe BV
Rolweg 25, 4104 AV Culemborg, The Netherlands
TEL: +31 (0) 345 87 00 33
FAX: +31 (0) 345 87 00 39
Email: info@newland-id.com
WEB: www.newland-id.com
Tech Support: tech-support@newland-id.com

Newland North America Inc.
Address: 46559 Fremont Blvd., Fremont, CA 94538, USA
TEL: 510 490 3888
Fax: 510 490 3887
Email: info@newlandna.com
WEB: www.newlandna.com

Newland Taiwan Inc.
7F-6, No. 268, Liancheng Rd., Jhonghe Dist. 235, New Taipei City, Taiwan
TEL: +886 2 7731 5388
FAX: +886 2 7731 5389
Email: info@newland-id.com.tw
WEB: www.newland-id.com.tw